

INTERNATIONAL

2026
PRODUCT CATALOG

THIS PAGE IS INTENTIONALLY LEFT BLANK

Table of Contents

About API International 01.1
Overview, Services, and Terms & Conditions of Sale 01.2
Flange Dimensional Tolerances 01.3

AWWA C207 Flanges 02.01
Class “B” Steel Ring Flanges (Series PF-B) 02.02
Class “D” Steel Ring Flanges (Series PF-D) 02.03-04
Class “D” Steel Overbore Ring Flanges (Series PFOB-D) 02.05
Class “E” Steel Ring Flanges (Series PF-E) 02.06
Class “E” Steel Overbore Ring Flanges (Series PFOB-E) 02.07
Class “F” Steel Ring Flanges (Series PF-F) 02.08
Class “B” Steel Blind Flanges (Series PFBL-B) 02.09
Class “D” Steel Blind Flanges (Series PFBL-D) 02.10
Class “E” Steel Blind Flanges (Series PFBL-E) 02.11
Class “F” Steel Blind Flanges (Series PFBL-F) 02.12
Class “D” Steel Hub Ring Flanges (Series PF-D-H) 02.13
Class “E” Steel Hub Ring Flanges (Series PF-E-H) 02.14

AWWA C228 Flanges 03.01
Class “SA” Stainless Steel Ring Flanges (Series SPF-A) 03.02
Class “SB” Stainless Steel Ring Flanges (Series SPF-B) 03.03
Class “SD” Stainless Steel Ring Flanges (Series SPF-D) 03.04
Class “SE” Stainless Steel Ring Flanges (Series SPF-E) 03.05
Class “SF” Stainless Steel Ring Flanges (Series SPF-F) 03.06
Class “SA” Stainless Steel Blind Flanges (Series SPFBL-A) 03.07
Class “SB” Stainless Steel Blind Flanges (Series SPFBL-B) 03.08
Class “SD” Stainless Steel Blind Flanges 1986 (Series SPFBL-86) 03.09
Class “SD” Stainless Steel Blind Flanges (Series SPFBL-D) 03.10
Class “SE” Stainless Steel Blind Flanges (Series SPFBL-E) 03.11
Class “SF” Stainless Steel Blind Flanges (Series SPFBL-F) 03.12

ANSI/ASME B16.5 Class 150# Flanges 04.01
Class 150 Forged Steel Flat Face Slip-on Flanges (Series FFS) 04.02
Class 150 Forged Steel Raised Face Slip-on Flanges (Series RFS) 04.03
Class 150 Forged Stainless Steel Flat Face Slip-on Flanges (Series SFFS) 04.04
Class 150 Forged Stainless Steel Raised Face Slip-on Flanges (Series SRFS) 04.05
Class 150 Steel Flat Face Blind Flanges (Series FFB) 04.06
Class 150 Steel Raised Face Blind Flanges (Series RFB) 04.07
Class 150 Stainless Steel Flat Face Blind Flanges (Series SFFB) 04.08
Class 150 Stainless Steel Raised Face Blind Flanges (Series SRFB) 04.09
Class 150 Forged Steel Flat Face Weld-Neck Flanges (Series FFWN) 04.10
Class 150 Forged Steel Raised Face Weld-Neck Flanges (Series RFWN) 04.11
Class 150 Forged Stainless Steel Flat Face Weld-Neck Flanges (Series SFFWN) 04.12
Class 150 Forged Stainless Steel Raised Face Weld-Neck Flanges (Series SRFWN) 04.13

ANSI/ASME B16.5 Class 300# Flanges 05.01
Class 300 Forged Steel Flat Face Slip-on Flanges (Series FFS-30) 05.02
Class 300 Forged Steel Raised Face Slip-on Flanges (Series RFS-30) 05.03
Class 300 Forged Stainless Steel Flat Face Slip-on Flanges (Series SFFS-30) 05.04
Class 300 Forged Stainless Steel Raised Face Slip-on Flanges (Series SRFS-30) 05.05
Class 300 Steel Flat Face Blind Flanges (Series FFB-30) 05.06
Class 300 Steel Raised Face Blind Flanges (Series RFB-30) 05.07
Class 300 Stainless Steel Flat Face Blind Flanges (Series SFFB-30) 05.08
Class 300 Stainless Steel Raised Face Blind Flanges (Series SRFB-30) 05.09
Class 300 Forged Steel Flat Face Weld-Neck Flanges (Series FFWN-30) 05.10
Class 300 Forged Steel Raised Face Weld-Neck Flanges (Series RFWN-30) 05.11
Class 300 Forged Stainless Steel Flat Face Weld-Neck Flanges (Series SFFWN-30) 05.12
Class 300 Forged Stainless Steel Raised Face Weld-Neck Flanges (Series SRFWN-30) 05.13

Table of Contents

CleanLine (NSF-61-372) Flanges 06.01

AWWA C228 Class “SD” Stainless Steel Ring Flanges (NSF-61-372) (Series SPF-D-CLN) 06.02
AWWA C228 Class “SE” Stainless Steel Ring Flanges (NSF-61-372) (Series SPF-E-CLN) 06.03
AWWA C228 Class “SD” Stainless Steel Blind Flanges (NSF-61-372) (Series SPFBL-D-CLN) 06.04
AWWA C228 Class “SE” Stainless Steel Blind Flanges (NSF-61-372) (Series SPFBL-E-CLN) 06.05
ANSI/ASME 16.5 Class 150 Forged Stainless Steel Flat-Face Slip-On Flanges (NSF-61-372) (Series SFFS-CLN) 06.06
ANSI/ASME 16.5 Class 150 Forged Stainless Steel Raised Face Slip-On Flanges (NSF-61-372) (Series SRFS-CLN) 06.07
ANSI/ASME 16.5 Class 150 Stainless Steel Raised Face Blind Flanges (NSF-61-372) (Series SRFB-CLN) 06.08
ANSI/ASME 16.47 Series A Class 150 Stainless Steel Raised Face Blind Flanges (NSF-61-372) (Series SRFB-150A-CLN) 06.09
ANSI/ASME 16.47 Series B Class 150 Stainless Steel Raised Face Blind Flanges (NSF-61-372) (Series SRFB-150B-CLN) 06.10
ANSI/ASME 16.5 Class 150 Forged Stainless Steel Raised Face Weld-Neck Flanges (NSF-61-372) (Series SRFWN-CLN) 06.11
ANSI/ASME 16.47 Series A Class 150 Forged Stainless Steel Raised Face Weld-Neck Flanges (NSF-61-372) (SRFWN-150A-CLN) 06.12
ANSI/ASME 16.47 Series B Class 150 Forged Stainless Steel Raised Face Weld-Neck Flanges (NSF-61-372) (SRFWN-150B-CLN) 06.13

Light Weight Flanges (½" & ⅝" Thick) 07.1

½" Thick Steel Slip-on Flanges (Series PFH) 07.2
½” Thick Reducing Steel Flanges (Series PFHR) 07.3
½” Thick Steel Slip-on Flanges for O.D. Tubing (Series PFH-16) 07.4
½” Thick Steel Blind Flanges (Series PFBH) 07.4
½” Thick Stainless Steel Flanges for Pipe (Series SPFH) 07.5
½” Thick Stainless Steel Flanges for O.D tubing (Series SPFH-16) 07.5
½” Thick Reducing Stainless Steel Flanges (Series SPFHR) 07.6
½” Thick Stainless Steel Blind Flanges (Series SPFBH) 07.7
⅝” Thick Steel Slip-on Flanges (Series PF-063) 07.8

Exhaust Flanges 08.1

Round Exhaust Steel Flanges (Series PFE & SPFE) 08.2
½” Thick Reducing Steel Flanges (Series PFHR) 08.3
½” Thick Reducing Stainless Steel Flanges (Series SPFHR) 08.4
Square Exhaust Steel Flanges (Series PFES) 08.5

Backing Flanges & Stub Ends 09.1

Stainless Steel Backing Flanges for Angle Face Rings (Series SABF) 09.2
Ductile Iron Backing Flanges for Stub Ends (Series BF) 09.3
Stub Ends (Series SE) 09.4

Miscellaneous Plate Flanges 10.1

Class 150 Steel Plate Flanges (Series PF) 10.2
Butterfly Valve Adapter Flanges (Series 4020) 10.3

Rubber Expansion Joints & Accessories 11.1

Flanged Molded Rubber Expansion Joints (Series AMS, SAMS, AMT & SAMT) 11.2-4
Flanged Molded Rubber Expansion Joints (Series AJS, SAJS, AJT & SAJT) 11.5-7
Threaded Union Molded Rubber Expansion Joints (Series AMU) 11.8
Threaded Union Molded Rubber Expansion Joints (Series AJU) 11.9
Control Rod Units (Series CRU) 11.10
Split Retaining Rings (Class 150) - Zinc Plated Steel & Stainless Steel (Series RR & SRR) 11.11
Split Retaining Rings (Class 300) - Zinc Plated Steel (Series RR-30) 11.12

Pump Connectors 12.1

Stainless Steel Braided - Flange x Flange (Series PCF) 12.2
Stainless Steel Braided - Male x Male (Series PCT) 12.2

Table of Contents

KLAMPz Grooved Piping System (UL/FM) 13.01
All Parts Overview 13.02
Pipe Size Reference Sheet 13.03
K05 Light Weight Flexible Coupling 13.04
K10 & K11 Elbows 13.05
K20 Tee 13.06
K41 Flange Adapter 13.07
K58 Adapter Nipples (ASTM A538) 13.08
SK58 Adapter Nipples (ASTM A312 304L/316L) 13.09
K60 Grooved Cap 13.10
Gaskets (EPDM) 13.11
Nuts & Bolts 13.12
KLAMPz Warranty 13.13

Fittings & Accessories 14.1
Threaded Half Couplings (Series THC) 14.2
Threaded One End Nipples (Series TOE) 14.3
Threaded Both End Nipples (Series TBE) 14.4
304L Stainless Steel 90 Degree Long Radius Elbow (Series LRE) 14.5
Gaskets (Series GNA & GRR) 14.6-7
Hydraulic Motor Pump Brackets (Series HB) 14.8
Exhaust Rain Caps (Series RC) 14.9

Valve Accessories 15.1
Valve Extensions for Butterfly Valves (Series VE) 15.2

Machining Services - Features Capabilities 16.1
Machining Services Information 16.2-4

Rubber Expansion Joints Installation Guide 17.1
Preparation 17.2
Installation 17.3-4

Your source for flanges, pipe fittings, and custom solutions!

API International is your dedicated manufacturer and engineered solutions provider specializing in essential components - including flanges, expansion joints, valve accessories, other pipe fittings, and custom fabricated parts. We proudly serve the Water Works, Exhaust, HVAC, and Data Center industries. Our conveniently located warehouses ensure quick distribution throughout the United States, while our in-house Machine Shop is ready to modify stock items or produce custom products built precisely to your unique specifications.



API Headquarters - Office Building

Our goal is simple: to be the easiest company you work with. We back that promise by being quick to respond, keeping the right products in inventory, and taking full ownership of every order. When you call, a member of our large sales staff is always there to answer. We hold ourselves fully accountable for meeting every requirement and ensuring your order ships on time.

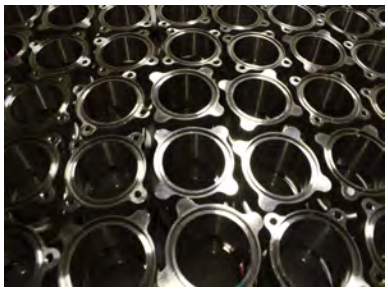



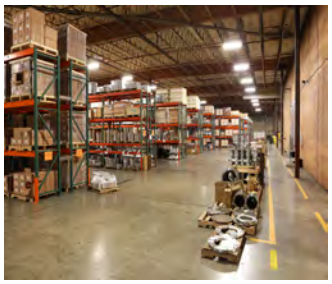

Services

International Procurement



With over forty-five years of international business experience, we've built and maintained strong, established alliances with suppliers across Asia and Europe. Our dedicated overseas representatives continuously cultivate close partnerships within this network while aggressively source-finding to secure the very best options for our clients.

In addition, our international representatives live and work in the regions they service, providing them with expert command of local traditions, dialects, and acceptable business practices. By partnering with API International for your procurement needs, you get instant access to our proven knowledge base - the critical foundation for successfully conducting business in the global markets that supply your components.

Custom Fabrication



A core competency of API International is the fabrication of custom parts in a variety of alloys for our OEM customers. Our team works closely with our engineering department and select manufacturers, creating a seamless process to customize high-quality products built precisely for your unique requirements.

Logistics Services



API International's full-service logistics platform allows OEMs to maintain perfect inventory levels of quality-controlled custom parts that align precisely with their production timeline without worrying about when their custom parts will be available for use. We handle all logistical aspects, including: shipping, freight forwarding, customs clearing, local trucking, and material handling from our network of overseas manufacturers and facilities. We handle all of the pieces of the logistics puzzle, enabling our OEMs clients to maintain inventory levels of quality controlled products that match their production timeline.

To maximize efficiency, we offer total flexibility: You can utilize our warehouse space to inventory blanket orders, or we can ship containers directly to your manufacturing facility. For customers who prefer their own warehouse, we even customize box dimensions to match your rack specifications perfectly.

All statements made within our Website and Catalog falls under API International, Inc.'s Standard Terms and Conditions: https://apiint.com/terms-and-conditions/

Flange Dimensional Tolerances

OUTSIDE DIAMETER	For O.D. ≤ 24.00"	+0.125", -0.062"
	For O.D. > 24.00"	+0.125", -0.125"
INSIDE DIAMETER	For I.D. ≤ 10.00"	+0.031", -0.000"
	For I.D. > 10.00"	+0.062", -0.000"
CONTACT FACE DIAMETER	Raised Face	+0.015", -0.015"
DRILLING	Bolt Hole Diameter	+0.031", -0.031"
	Bolt Circle Diameter	+0.062", -0.062"
	Bolt Hole Spacing	+0.031", -0.031"
THICKNESS	For Nominal Size ≤ 18"	+0.125", -0.000"
	For Nominal Size ≥ 20"	+0.187", -0.000"

AWWA C207
Flange Specifications
Class: B, D, E, & F
Domestic (AIS) & Import



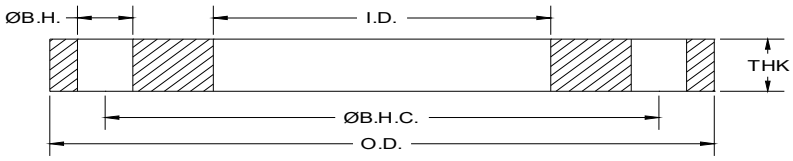



AWWA C207 Class "B" Steel-Ring Flanges [86 psi]

API Part Number	Size	O.D.	I.D.	Ø B.H.C.	Ø B.H.	# B.H.	THK	Weight Lbs
PF0400-B	4	9.00	4.57	7.50	0.750	8	0.625	7.7
PF0500-B	5	10.00	5.66	8.50	0.875	8	0.625	8.6
PF0600-B	6	11.00	6.72	9.50	0.875	8	0.688	10.7
PF0800-B	8	13.50	8.72	11.75	0.875	8	0.688	15.3
PF1000-B	10	16.00	10.88	14.25	1.000	12	0.688	19.2
PF1200-B	12	19.00	12.88	17.00	1.000	12	0.688	28.1
PF1400-B	14	21.00	14.19	18.75	1.125	12	0.688	34.4
PF1600-B	16	23.50	16.19	21.25	1.125	16	0.688	41.3
PF1800-B	18	25.00	18.19	22.75	1.250	16	0.688	41.2
PF2000-B	20	27.50	20.19	25.00	1.250	20	0.688	48.6
PF2200-B	22	29.50	22.19	27.25	1.375	20	0.750	56.8
PF2400-B	24	32.00	24.19	29.50	1.375	20	0.750	67.0
PF2600-B	26	34.25	26.19	31.75	1.375	24	0.812	79.3
PF2800-B	28	36.50	28.19	34.00	1.375	28	0.875	93.7
PF3000-B	30	38.75	30.19	36.00	1.375	28	0.875	103.9
PF3200-B	32	41.75	32.19	38.50	1.625	28	0.938	131.3
PF3400-B	34	43.75	34.19	40.50	1.625	32	0.938	137.0
PF3600-B	36	46.00	36.19	42.75	1.625	32	1.000	159.7
PF3800-B	38	48.75	38.19	45.25	1.625	32	1.000	184.5
PF4000-B	40	50.75	40.19	47.25	1.625	36	1.000	191.5
PF4200-B	42	53.00	42.19	49.50	1.625	36	1.125	232.5
PF4400-B	44	55.25	44.19	51.75	1.625	40	1.125	247.6
PF4600-B	46	57.25	46.19	53.75	1.625	40	1.125	258.6
PF4800-B	48	59.50	48.19	56.00	1.625	44	1.250	304.9
PF5000-B	50	61.75	50.19	58.25	1.875	44	1.250	315.2
PF5200-B	52	64.00	52.19	60.50	1.875	44	1.250	336.9
PF5400-B	54	66.25	54.19	62.75	1.875	44	1.375	395.1
PF6000-B	60	73.00	60.19	69.25	1.875	52	1.500	506.1
PF6600-B	66	80.00	66.19	76.00	1.875	52	1.625	661.1
PF7200-B	72	86.50	72.19	82.50	1.875	60	1.750	798.8
PF7800-B	78	93.00	78.19	89.00	2.125	64	2.000	995.6
PF8400-B	84	99.75	84.19	95.50	2.125	64	2.000	1140.7
PF9000-B	90	106.50	90.19	102.00	2.438	68	2.250	1408.8
PF9600-B	96	113.25	96.19	108.50	2.438	68	2.250	1591.2
PF10200-B	102	120.00	102.19	114.50	2.688	72	2.500	1918.7
PF10800-B	108	126.75	108.19	120.75	2.688	72	2.500	2142.6
PF11400-B	114	133.50	114.19	126.75	2.938	76	2.750	2534.1
PF12000-B	120	140.25	120.19	132.75	2.938	76	2.750	2803.9
PF12600-B	126	147.00	126.19	139.25	3.188	80	3.000	3263.6
PF13200-B	132	153.75	132.19	145.75	3.188	80	3.000	3583.5
PF14400-B	144	167.25	144.19	158.25	3.438	84	3.250	4489.5

Notes:

a. Steel material conforms to the requirements of AWWA C207 specifications. Other material is available upon request.

b. Meets ASME/ANSI Class 150 bolt pattern.

c. For flanges in smaller sizes see section 5: ANSI/ASME B16.5

Pressure Ratings: 86 psi at atmospheric temperature.

ALL DIMENSIONS ARE IN INCHES UNLESS OTHERWISE STATED.

DC# 1026

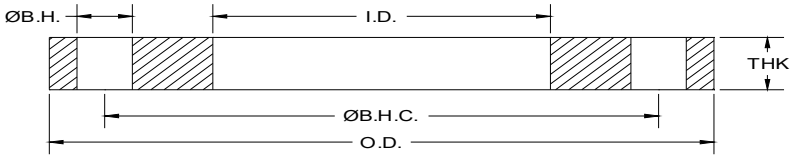



AWWA C207 Class "D" Steel-Ring Flanges [150-175 psi]

API Part Number	Size	O.D.	I.D.	Ø B.H.C.	Ø B.H.	# B.H.	THK	Weight Lbs
PF0400-D	4	9.00	4.57	7.50	0.750	8	0.625	7.7
PF0500-D	5	10.00	5.66	8.50	0.875	8	0.625	8.6
PF0600-D	6	11.00	6.72	9.50	0.875	8	0.688	10.7
PF0800-D	8	13.50	8.72	11.75	0.875	8	0.688	15.3
PF1000-D	10	16.00	10.88	14.25	1.000	12	0.688	19.2
PF1200-D	12	19.00	12.88	17.00	1.000	12	0.812	33.1
PF1400-D	14	21.00	14.19	18.75	1.125	12	0.938	46.8
PF1600-D	16	23.50	16.19	21.25	1.125	16	1.000	60.1
PF1800-D	18	25.00	18.19	22.75	1.250	16	1.062	63.7
PF2000-D	20	27.50	20.19	25.00	1.250	20	1.125	79.5
PF2200-D	22	29.50	22.19	27.25	1.375	20	1.188	89.9
PF2400-D	24	32.00	24.19	29.50	1.375	20	1.250	111.6
PF2600-D	26	34.25	26.19	31.75	1.375	24	1.312	128.1
PF2800-D	28	36.50	28.19	34.00	1.375	28	1.312	140.6
PF3000-D	30	38.75	30.19	36.00	1.375	28	1.375	163.3
PF3200-D	32	41.75	32.19	38.50	1.625	28	1.500	210.0
PF3400-D	34	43.75	34.19	40.50	1.625	32	1.500	219.1
PF3600-D	36	46.00	36.19	42.75	1.625	32	1.625	259.4
PF3800-D	38	48.75	38.19	45.25	1.625	32	1.625	299.8
PF4000-D	40	50.75	40.19	47.25	1.625	36	1.625	311.1
PF4200-D	42	53.00	42.19	49.50	1.625	36	1.750	361.7
PF4400-D	44	55.25	44.19	51.75	1.625	40	1.750	385.1
PF4600-D	46	57.25	46.19	53.75	1.625	40	1.750	402.2
PF4800-D	48	59.50	48.19	56.00	1.625	44	1.875	457.3
PF5000-D	50	61.75	50.19	58.25	1.875	44	2.000	504.4
PF5200-D	52	64.00	52.19	60.50	1.875	44	2.000	539.1
PF5400-D	54	66.25	54.19	62.75	1.875	44	2.125	610.6
PF6000-D	60	73.00	60.19	69.25	1.875	52	2.250	759.1
PF6600-D	66	80.00	66.19	76.00	1.875	52	2.500	1017.0
PF7200-D	72	86.50	72.19	82.50	1.875	60	2.625	1198.2
PF7800-D	78	93.00	78.19	89.00	2.125	64	2.750	1368.9
PF8400-D	84	99.75	84.19	95.50	2.125	64	2.875	1639.7
PF9000-D	90	106.50	90.19	102.00	2.438	68	3.000	1878.2
PF9600-D	96	113.25	96.19	108.50	2.438	68	3.250	2298.4
PF10200-D	102	120.00	102.19	114.50	2.688	72	3.250	2494.3
PF10800-D	108	126.75	108.19	120.75	2.688	72	3.375	2892.5
PF11400-D	114	133.50	114.19	126.75	2.938	76	3.500	3225.2
PF12000-D	120	140.25	120.19	132.75	2.938	76	3.500	3568.6
PF12600-D	126	147.00	126.19	139.25	3.188	80	3.750	4079.5
PF13200-D	132	153.75	132.19	145.75	3.188	80	3.875	4628.6
PF14400-D	144	167.25	144.19	158.25	3.438	84	4.125	5698.3

Notes:

a. Steel material conforms to the requirements of AWWA C207 specifications. Other material is available upon request.

b. Meets ASME/ANSI Class 150 bolt pattern.

c. For flanges in smaller sizes see section 5: ANSI/ASME B16.5

Pressure Ratings: 175psi (4" – 12") and 150psi (14" and larger) at atmospheric temperature.

ALL DIMENSIONS ARE IN INCHES UNLESS OTHERWISE STATED.

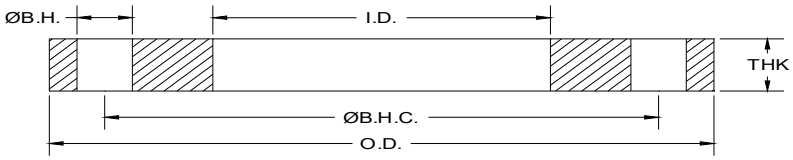



AWWA C207 Class "D" Steel-Ring Flanges for O.D. Tubing [175 psi]

API Part Number	Size	O.D.	I.D.	Ø B.H.C.	Ø B.H.	# B.H.	THK	Weight Lbs
PF0400-D-16	4	9.00	4.06	7.50	0.750	8	0.625	8.5
PF0500-D-16	5	10.00	5.06	8.50	0.875	8	0.625	9.6
PF0600-D-16	6	11.00	6.09	9.50	0.875	8	0.688	12.0
PF0800-D-16	8	13.50	8.09	11.75	0.875	8	0.688	17.1
PF1000-D-16	10	16.00	10.12	14.25	1.000	12	0.688	22.0
PF1200-D-16	12	19.00	12.12	17.00	1.000	12	0.812	37.9

Notes:

a. Steel material conforms to the requirements of AWWA C207 specifications. Other material is available upon request.

b. Meets ASME/ANSI Class 150 bolt pattern.

Pressure Ratings: 175psi (4" – 12") 150psi (14" and larger) at atmospheric temperature.

ALL DIMENSIONS ARE IN INCHES UNLESS OTHERWISE STATED.

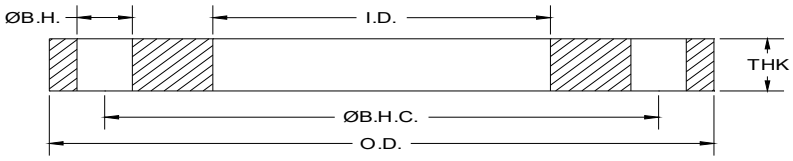



AWWA C207 Class "D" Steel-Ring Overbore Flanges [150-175 psi]

API Part Number	Size	O.D.	I.D.	Ø B.H.C.	Ø B.H.	# B.H.	THK	Weight Lbs
PF0B1400-1613-D	14	21.00	16.13	18.75	1.125	12	0.935	34.0
PF0B1600-1813-D	16	23.50	18.13	21.25	1.130	16	1.000	55.0
PF0B1800-1988-D	18	25.00	19.88	22.75	1.250	16	1.060	53.0
PF0B1800-2013-D	18	25.00	20.13	22.75	1.250	16	1.060	53.0
PF0B2000-2188-D	20	27.50	21.88	25.00	1.250	20	1.130	75.0
PF0B2400-2588-D	24	32.00	25.88	29.50	1.375	20	1.250	91.0
PF0B2400-2613-D	24	32.00	26.13	29.50	1.375	20	1.250	84.5
PF0B3000-3200-D	30	38.75	32.00	36.00	1.380	28	1.380	130.5
PF0B3600-3800-D	36	46.00	38.00	42.75	1.630	32	1.630	213.5
PF0B4200-4400-D	42	53.00	44.00	49.50	1.630	36	1.750	304.0
PF0B4800-5000-D	48	59.50	50.00	56.00	1.630	44	1.880	457.0

Notes:

a. Steel material conforms to the requirements of AWWA C207 specifications. Other material is available upon request.

b. Meets ASME/ANSI Class 150 bolt pattern.

Pressure Ratings: 175psi (4" – 12") 150psi (14" and larger) at atmospheric temperature.

ALL DIMENSIONS ARE IN INCHES UNLESS OTHERWISE STATED.

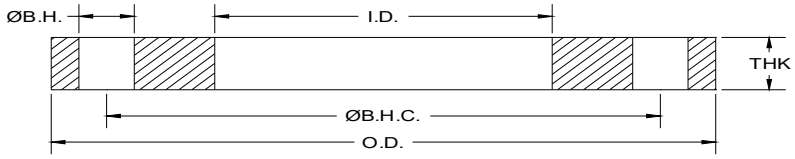



AWWA C207 Class "E" Steel-Ring Flanges [275psi]

API Part Number	Size	O.D.	I.D.	Ø B.H.C.	Ø B.H.	# B.H.	THK	Weight Lbs
PF0400-E	4	9.00	4.57	7.50	0.750	8	1.125	13.9
PF0500-E	5	10.00	5.66	8.50	0.875	8	1.188	16.3
PF0600-E	6	11.00	6.72	9.50	0.875	8	1.313	20.4
PF0800-E	8	13.50	8.72	11.75	0.875	8	1.500	33.4
PF1000-E	10	16.00	10.88	14.25	1.000	12	1.563	43.7
PF1200-E	12	19.00	12.88	17.00	1.000	12	1.750	71.4
PF1400-E	14	21.00	14.19	18.75	1.125	12	1.875	93.7
PF1600-E	16	23.50	16.19	21.25	1.125	16	2.000	120.2
PF1800-E	18	25.00	18.19	22.75	1.250	16	2.125	127.3
PF2000-E	20	27.50	20.19	25.00	1.250	20	2.375	167.8
PF2200-E	22	29.50	22.19	27.25	1.375	20	2.500	189.2
PF2400-E	24	32.00	24.19	29.50	1.375	20	2.625	234.3
PF2600-E	26	34.25	26.19	31.75	1.375	24	2.750	268.4
PF2800-E	28	36.50	28.19	34.00	1.375	28	2.750	294.5
PF3000-E	30	38.75	30.19	36.00	1.375	28	2.875	341.4
PF3200-E	32	41.75	32.19	38.50	1.625	28	3.000	420.0
PF3400-E	34	43.75	34.19	40.50	1.625	32	3.000	438.3
PF3600-E	36	46.00	36.19	42.75	1.625	32	3.125	498.9
PF3800-E	38	48.75	38.19	45.25	1.625	32	3.125	576.5
PF4000-E	40	50.75	40.19	47.25	1.625	36	3.250	622.3
PF4200-E	42	53.00	42.19	49.50	1.625	36	3.375	697.6
PF4400-E	44	55.25	44.19	51.75	1.625	40	3.375	742.7
PF4600-E	46	57.25	46.19	53.75	1.625	40	3.438	790.2
PF4800-E	48	59.50	48.19	56.00	1.625	44	3.500	853.6
PF5000-E	50	61.75	50.19	58.25	1.875	44	3.500	882.7
PF5200-E	52	64.00	52.19	60.50	1.875	44	3.625	977.1
PF5400-E	54	66.25	54.19	62.75	1.875	44	3.750	1077.6
PF6000-E	60	73.00	60.19	69.25	1.875	52	3.875	1307.4
PF6600-E	66	80.00	66.19	76.00	1.875	52	4.250	1729.0
PF7200-E	72	86.50	72.19	82.50	1.875	60	4.375	1997.0
PF7800-E	78	93.00	78.19	89.00	2.125	64	4.750	2364.5
PF8400-E	84	99.75	84.19	95.50	2.125	64	4.750	2709.1
PF9000-E	90	106.50	90.19	102.00	2.438	68	5.125	3208.8
PF9600-E	96	113.25	96.19	108.50	2.438	68	5.125	3624.3
PF10200-E	102	120.00	102.19	114.50	2.688	72	5.500	4221.1
PF10800-E	108	126.75	108.19	120.75	2.688	72	5.500	4713.8
PF11400-E	114	133.50	114.19	126.75	2.938	76	5.875	5413.8
PF12000-E	120	140.25	120.19	132.75	2.938	76	5.875	5990.1
PF12600-E	126	147.00	126.19	139.25	3.188	80	6.250	6799.2
PF13200-E	132	153.75	132.19	145.75	3.188	80	6.250	8062.8
PF14400-E	144	167.25	144.19	158.25	3.438	84	6.750	9346.0

Notes:

a. Steel material conforms to the requirements of AWWA C207 specifications. Other material is available upon request.

b. Meets ASME/ANSI Class 150 bolt pattern.

c. For flanges in smaller sizes see section 5: ANSI/ASME B16.5

Pressure Ratings: 275psi at atmospheric temperature.

ALL DIMENSIONS ARE IN INCHES UNLESS OTHERWISE STATED.

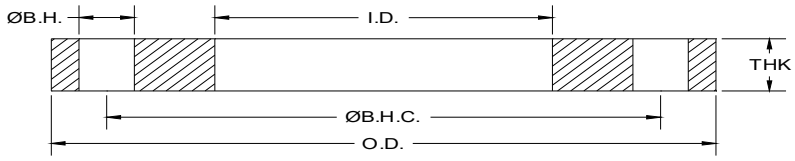



AWWA C207 Class “E” Steel-Ring Overbore Flanges [275 psi]

API Part Number	Size	O.D.	I.D.	Ø B.H.C.	Ø B.H.	# B.H.	THK	Weight Lbs
PF0B1400-1613-E	14	21.00	16.13	18.75	1.125	12	1.875	69.0
PF0B1600-1813-E	16	23.50	18.13	21.25	1.130	16	2.000	120.0
PF0B1800-1988-E	18	25.00	19.88	22.75	1.250	16	2.130	97.0
PF0B1800-2013-E	18	25.00	20.13	22.75	1.250	16	2.130	125.0
PF0B2000-2188-E	20	27.50	21.88	25.00	1.250	20	2.380	168.0
PF0B2400-2588-E	24	32.00	25.88	29.50	1.375	20	2.625	234.0
PF0B2400-2594-E	24	32.00	25.94	29.50	1.380	20	2.630	235.0
PF0B2400-2613-E	24	32.00	26.13	29.50	1.380	20	2.630	234.0
PF0B3000-3200-E	30	38.75	32.00	36.00	1.380	28	2.880	341.0
PF0B3000-3206-E	30	38.75	32.06	36.00	1.375	28	2.880	341.0
PF0B3600-3800-E	36	46.00	38.00	42.75	1.630	32	3.130	499.0
PF0B4200-4400-E	42	53.00	44.00	49.50	1.630	36	3.380	698.0
PF0B4800-5000-E	48	59.50	50.00	56.00	1.630	44	3.500	854.0

Notes:

a. Steel material conforms to the requirements of AWWA C207 specifications. Other material is available upon request.

b. Meets ASME/ANSI Class 150 bolt pattern.

Pressure Ratings: 275psi at atmospheric temperature.

ALL DIMENSIONS ARE IN INCHES UNLESS OTHERWISE STATED.

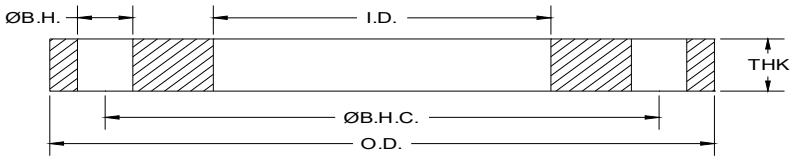



AWWA C207 Class "F" Steel-Ring Flanges [300 psi]

API Part Number	Size	O.D.	I.D.	Ø B.H.C.	Ø B.H.	# B.H.	THK	Weight Lbs
PF0400-F	4	10.00	4.57	7.88	0.875	8	1.130	18.4
PF0500-F	5	11.00	5.66	9.25	0.875	8	1.210	22.3
PF0600-F	6	12.50	6.73	10.62	0.875	12	1.310	29.7
PF0800-F	8	15.00	8.73	13.00	1.000	12	1.310	39.9
PF1000-F	10	17.50	10.88	15.25	1.125	16	1.500	56.0
PF1200-F	12	20.50	12.88	17.75	1.250	16	1.630	83.2
PF1400-F	14	23.00	14.19	20.25	1.250	20	1.940	128.0
PF1600-F	16	25.50	16.19	22.50	1.375	20	2.140	166.8
PF1800-F	18	28.00	18.19	24.75	1.375	24	2.250	204.2
PF2000-F	20	30.50	20.19	27.00	1.375	24	2.330	247.4
PF2200-F	22	33.00	22.19	29.25	1.675	24	2.500	306.7
PF2400-F	24	36.00	24.19	32.00	1.625	24	2.690	387.6
PF2600-F	26	38.25	26.19	34.50	1.875	28	3.000	451.0
PF2800-F	28	40.75	28.19	37.00	1.875	28	3.130	532.2
PF3000-F	30	43.00	30.19	39.25	1.875	28	3.150	585.7
PF3200-F	32	45.25	32.19	41.50	1.875	28	3.250	657.5
PF3400-F	34	47.50	34.19	43.50	1.875	28	3.380	743.0
PF3600-F	36	50.00	36.19	46.00	2.125	32	3.460	801.9
PF3800-F	38	52.25	38.19	48.00	2.125	32	3.500	874.3
PF4000-F	40	54.25	40.19	50.25	2.125	36	3.630	937.4
PF4200-F	42	57.00	42.19	52.75	2.125	36	3.810	1103.4
PF4400-F	44	59.25	44.19	55.00	2.125	36	4.000	1237.2
PF4600-F	46	61.50	46.19	57.25	2.125	40	4.130	1360.8
PF4800-F	48	65.00	48.19	60.75	2.125	40	4.500	1736.8

Notes:

a. Steel material conforms to the requirements of AWWA C207 specifications. Other material is available upon request.

b. Meets ASME/ANSI Class 300 bolt pattern.

Pressure Ratings: 300psi at atmospheric temperature.

ALL DIMENSIONS ARE IN INCHES UNLESS OTHERWISE STATED.

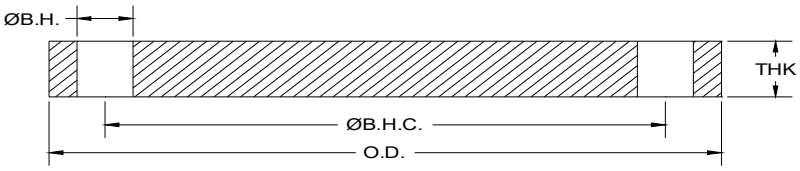



AWWA C207 Class "B" Steel Blind Flanges - 2013 Specs [86 psi]

API Part Number	Size	O.D.	I.D.	Ø B.H.C.	Ø B.H.	# B.H.	THK	Weight Lbs
PFBL0400-B	4	9.00	BLIND	7.50	0.750	8	0.625	10.6
PFBL0500-B	5	10.00	BLIND	8.50	0.875	8	0.625	13.0
PFBL0600-B	6	11.00	BLIND	9.50	0.875	8	0.688	17.6
PFBL0800-B	8	13.50	BLIND	11.75	0.875	8	0.688	27.0
PFBL1000-B	10	16.00	BLIND	14.25	1.000	12	0.688	38.5
PFBL1200-B	12	19.00	BLIND	17.00	1.000	12	0.719	67.0
PFBL1400-B	14	21.00	BLIND	18.75	1.125	12	0.791	80.0
PFBL1600-B	16	23.50	BLIND	21.25	1.125	16	0.892	105.0
PFBL1800-B	18	25.00	BLIND	22.75	1.250	16	0.950	132.0
PFBL2000-B	20	27.50	BLIND	25.00	1.250	20	1.040	186.0
PFBL2200-B	22	29.50	BLIND	27.25	1.375	20	1.132	209.0
PFBL2400-B	24	32.00	BLIND	29.50	1.375	20	1.216	268.0
PFBL2600-B	26	34.25	BLIND	31.75	1.375	24	1.307	328.0
PFBL2800-B	28	36.50	BLIND	34.00	1.375	28	1.398	397.0
PFBL3000-B	30	38.75	BLIND	36.00	1.375	28	1.477	488.0
PFBL3200-B	32	41.75	BLIND	38.50	1.625	28	1.581	586.0
PFBL3400-B	34	43.75	BLIND	40.50	1.625	32	1.661	675.0
PFBL3600-B	36	46.00	BLIND	42.75	1.625	32	1.751	790.0
PFBL3800-B	38	48.75	BLIND	45.25	1.625	32	1.853	944.0
PFBL4000-B	40	50.75	BLIND	47.25	1.625	36	1.933	1066.0
PFBL4200-B	42	53.00	BLIND	49.50	1.625	36	2.023	1220.0
PFBL4400-B	44	55.25	BLIND	51.75	1.625	40	2.114	1385.0
PFBL4600-B	46	57.25	BLIND	53.75	1.625	40	2.194	1547.0
PFBL4800-B	48	59.50	BLIND	56.00	1.625	44	2.285	1739.0
PFBL5000-B	50	61.75	BLIND	58.25	1.875	44	2.377	1934.0
PFBL5200-B	52	64.00	BLIND	60.50	1.875	44	2.468	2163.0
PFBL5400-B	54	66.25	BLIND	62.75	1.875	44	2.559	2408.0
PFBL6000-B	60	73.00	BLIND	69.25	1.875	52	2.820	3225.0
PFBL6600-B	66	80.00	BLIND	76.00	1.875	52	3.092	4272.0
PFBL7200-B	72	86.50	BLIND	82.50	1.875	60	3.353	5418.0

Notes:

a. Steel material conforms to the requirements of AWWA C207 specifications. Other material is available upon request.

b. Meets ASME/ANSI Class 150 bolt pattern.

c. AWWA recommends the use of Dish Assemblies for sizes above 72". Call API customer service for additional information.

Pressure Ratings: 86psi at atmospheric temperature.

ALL DIMENSIONS ARE IN INCHES UNLESS OTHERWISE STATED.

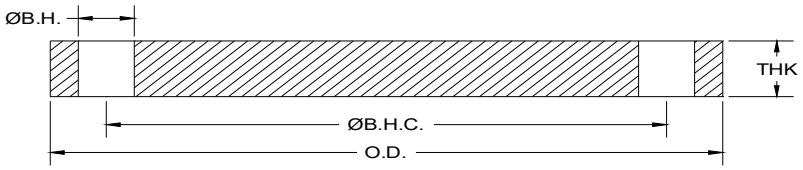



AWWA C207 Class "D" Steel Blind Flanges [150-175 psi]

API Part Number	Size	O.D.	I.D.	Ø B.H.C.	Ø B.H.	# B.H.	THK	Weight Lbs
PFBL0400-D	4	9.00	BLIND	7.50	0.750	8	0.625	10.6
PFBL0500-D	5	10.00	BLIND	8.50	0.875	8	0.650	13.6
PFBL0600-D	6	11.00	BLIND	9.50	0.875	8	0.693	17.7
PFBL0800-D	8	13.50	BLIND	11.75	0.875	8	0.812	31.8
PFBL1000-D	10	16.00	BLIND	14.25	1.000	12	0.953	51.7
PFBL1200-D	12	19.00	BLIND	17.00	1.000	12	1.117	86.7
PFBL1400-D	14	21.00	BLIND	18.75	1.125	12	1.133	107.4
PFBL1600-D	16	23.50	BLIND	21.25	1.125	16	1.265	149.8
PFBL1800-D	18	25.00	BLIND	22.75	1.250	16	1.331	177.7
PFBL2000-D	20	27.50	BLIND	25.00	1.250	20	1.448	233.6
PFBL2200-D	22	29.50	BLIND	27.25	1.375	20	1.568	290.5
PFBL2400-D	24	32.00	BLIND	29.50	1.375	20	1.661	364.5
PFBL2600-D	26	34.25	BLIND	31.75	1.375	24	1.786	448.2
PFBL2800-D	28	36.50	BLIND	34.00	1.375	28	1.906	542.6
PFBL3000-D	30	38.75	BLIND	36.00	1.375	28	2.008	647.3
PFBL3200-D	32	41.75	BLIND	38.50	1.625	28	2.150	798.6
PFBL3400-D	34	43.75	BLIND	40.50	1.625	32	2.252	916.9
PFBL3600-D	36	46.00	BLIND	42.75	1.625	32	2.370	1071.4
PFBL3800-D	38	48.75	BLIND	45.25	1.625	32	2.506	1278.2
PFBL4000-D	40	50.75	BLIND	47.25	1.625	36	2.609	1440.1
PFBL4200-D	42	53.00	BLIND	49.50	1.625	36	2.729	1648.1
PFBL4400-D	44	55.25	BLIND	51.75	1.625	40	2.849	1868.2
PFBL4600-D	46	57.25	BLIND	53.75	1.625	40	2.952	2083.7
PFBL4800-D	48	59.50	BLIND	56.00	1.625	44	3.072	2340.7
PFBL5000-D	50	61.75	BLIND	58.25	1.875	44	3.196	2601.9
PFBL5200-D	52	64.00	BLIND	60.50	1.875	44	3.315	2907.5
PFBL5400-D	54	66.25	BLIND	62.75	1.875	44	3.435	3236.7
PFBL6000-D	60	73.00	BLIND	69.25	1.875	52	3.779	4327.6
PFBL6600-D	66	80.00	BLIND	76.00	1.875	52	4.136	5722.2
PFBL7200-D	72	86.50	BLIND	82.50	1.875	60	4.480	7249.0

Notes:

a. Steel material conforms to the requirements of AWWA C207 specifications. Other material is available upon request.

b. Meets ASME/ANSI Class 150 bolt pattern.

c. AWWA recommends the use of Dish Assemblies for sizes above 72". Call API customer service for additional information.

Pressure Ratings: 175psi (4" – 12") and 150psi (14" and larger) at atmospheric temperature.

ALL DIMENSIONS ARE IN INCHES UNLESS OTHERWISE STATED.

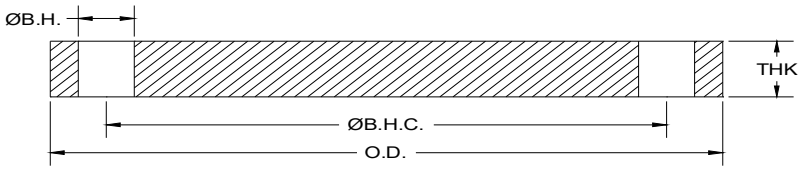



AWWA C207 Class "E" Steel Blind Flanges [275 psi]

API Part Number	Size	O.D.	I.D.	Ø B.H.C.	Ø B.H.	# B.H.	THK	Weight Lbs
PFBL0400-E	4	9.00	BLIND	7.50	0.750	8	1.125	19.2
PFBL0500-E	5	10.00	BLIND	8.50	0.875	8	1.188	24.8
PFBL0600-E	6	11.00	BLIND	9.50	0.875	8	1.313	33.6
PFBL0800-E	8	13.50	BLIND	11.75	0.875	8	1.500	58.8
PFBL1000-E	10	16.00	BLIND	14.25	1.000	12	1.563	84.9
PFBL1200-E	12	19.00	BLIND	17.00	1.000	12	1.750	135.9
PFBL1400-E	14	21.00	BLIND	18.75	1.125	12	1.875	177.7
PFBL1600-E	16	23.50	BLIND	21.25	1.125	16	2.000	236.8
PFBL1800-E	18	25.00	BLIND	22.75	1.250	16	2.125	283.7
PFBL2000-E	20	27.50	BLIND	25.00	1.250	20	2.375	383.2
PFBL2200-E	22	29.50	BLIND	27.25	1.375	20	2.500	463.1
PFBL2400-E	24	32.00	BLIND	29.50	1.375	20	2.625	576.1
PFBL2600-E	26	34.25	BLIND	31.75	1.375	24	2.750	690.1
PFBL2800-E	28	36.50	BLIND	34.00	1.375	28	2.750	782.9
PFBL3000-E	30	38.75	BLIND	36.00	1.375	28	2.875	926.8
PFBL3200-E	32	41.75	BLIND	38.50	1.625	28	3.000	1114.3
PFBL3400-E	34	43.75	BLIND	40.50	1.625	32	3.050	1241.8
PFBL3600-E	36	46.00	BLIND	42.75	1.625	32	3.209	1450.7
PFBL3800-E	38	48.75	BLIND	45.25	1.625	32	3.394	1731.1
PFBL4000-E	40	50.75	BLIND	47.25	1.625	36	3.533	1950.2
PFBL4200-E	42	53.00	BLIND	49.50	1.625	36	3.695	2231.5
PFBL4400-E	44	55.25	BLIND	51.75	1.625	40	3.857	2529.4
PFBL4600-E	46	57.25	BLIND	53.75	1.625	40	3.997	2821.3
PFBL4800-E	48	59.50	BLIND	56.00	1.625	44	4.159	3169.0
PFBL5000-E	50	61.75	BLIND	58.25	1.875	44	4.327	3522.6
PFBL5200-E	52	64.00	BLIND	60.50	1.875	44	4.489	3937.1
PFBL5400-E	54	66.25	BLIND	62.75	1.875	44	4.651	4382.5
PFBL6000-E	60	73.00	BLIND	69.25	1.875	52	5.116	5858.7
PFBL6600-E	66	80.00	BLIND	76.00	1.875	52	5.601	7749.0
PFBL7200-E	72	86.50	BLIND	82.50	1.875	60	6.066	9815.3

Notes:

a. Steel material conforms to the requirements of AWWA C207 specifications. Other material is available upon request.

b. Meets ASME/ANSI Class 150 bolt pattern.

c. AWWA recommends the use of Dish Assemblies for sizes above 72". Call API customer service for additional information.

Pressure Ratings: 275psi at atmospheric temperature.

ALL DIMENSIONS ARE IN INCHES UNLESS OTHERWISE STATED.

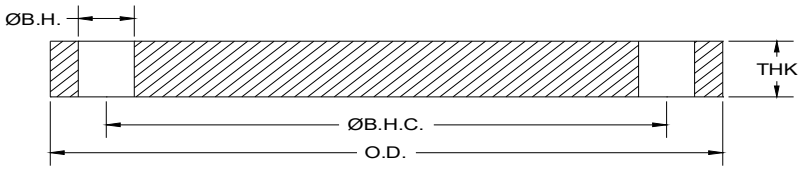



AWWA C207 Class "F" Steel Blind Flanges [300 psi]

API Part Number	Size	O.D.	I.D.	Ø B.H.C.	Ø B.H.	# B.H.	THK	Weight Lbs
PFBL0400-F	4	10.00	BLIND	7.88	0.875	8	1.130	23.6
PFBL0500-F	5	11.00	BLIND	9.25	0.875	8	1.210	30.9
PFBL0600-F	6	12.50	BLIND	10.62	0.875	12	1.310	42.9
PFBL0800-F	8	15.00	BLIND	13.00	1.000	12	1.310	62.1
PFBL1000-F	10	17.50	BLIND	15.25	1.125	16	1.500	95.5
PFBL1200-F	12	20.50	BLIND	17.75	1.250	16	1.630	143.4
PFBL1400-F	14	23.00	BLIND	20.25	1.250	20	1.940	214.9
PFBL1600-F	16	25.50	BLIND	22.50	1.375	20	2.140	291.7
PFBL1800-F	18	28.00	BLIND	24.75	1.375	24	2.250	369.8
PFBL2000-F	20	30.50	BLIND	27.00	1.375	24	2.330	458.8
PFBL2200-F	22	33.00	BLIND	29.25	1.625	24	2.500	580.6
PFBL2400-F	24	36.00	BLIND	32.00	1.625	24	2.690	737.9
PFBL2600-F	26	38.25	BLIND	34.50	1.875	28	3.000	911.0
PFBL2800-F	28	40.75	BLIND	37.00	1.875	28	3.130	1088.0
PFBL3000-F	30	43.00	BLIND	39.25	1.875	28	3.166	1233.3
PFBL3200-F	32	45.25	BLIND	41.50	1.875	28	3.332	1445.2
PFBL3400-F	34	47.50	BLIND	43.50	1.875	28	3.475	1668.6
PFBL3600-F	36	50.00	BLIND	46.00	2.125	32	3.671	1924.2
PFBL3800-F	38	52.25	BLIND	48.00	2.125	32	3.815	2195.0
PFBL4000-F	40	54.25	BLIND	50.25	2.125	36	3.982	2463.8
PFBL4200-F	42	57.00	BLIND	52.75	2.125	36	4.171	2864.7
PFBL4400-F	44	59.25	BLIND	55.00	2.125	36	4.338	3231.9
PFBL4600-F	46	61.50	BLIND	57.25	2.125	40	4.505	3628.7
PFBL4800-F	48	65.00	BLIND	60.75	2.125	40	4.781	4322.1

Notes:

a. Steel material conforms to the requirements of AWWA C207 specifications. Other material is available upon request.

b. Meets ASME/ANSI Class 300 bolt pattern.

Pressure Ratings: 300psi at atmospheric temperature.

ALL DIMENSIONS ARE IN INCHES UNLESS OTHERWISE STATED.

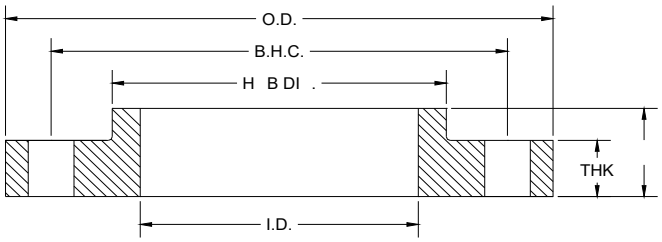



AWWA C207 Class "D" Steel Hub Ring Flange [150-175 psi]

API Part Number	Size	O.D.	I.D.	Ø B.H.C.	Ø B.H.	# B.H.	THK	L	H.D.	Weight Lbs
PF0400-D-H	4	9.00	4.57	7.50	0.750	8	0.500	0.875	5.312	6.8
PF0500-D-H	5	10.00	5.66	8.50	0.875	8	0.562	1.250	6.312	8.9
PF0600-D-H	6	11.00	6.72	9.50	0.875	8	0.562	1.250	7.562	10.5
PF0800-D-H	8	13.50	8.72	11.75	0.875	8	0.562	1.250	9.688	15.2
PF1000-D-H	10	16.00	10.88	14.25	1.000	12	0.688	1.250	12.000	22.4
PF1200-D-H	12	19.00	12.88	17.00	1.000	12	0.688	1.250	14.375	33.1
PF1400-D-H	14	21.00	14.19	18.75	1.125	12	0.750	1.250	15.750	42.6
PF1600-D-H	16	23.50	16.19	21.25	1.125	16	0.750	1.250	18.000	51.9
PF1800-D-H	18	25.00	18.19	22.75	1.250	16	0.750	1.250	19.875	52.0
PF2000-D-H	20	27.50	20.19	25.00	1.250	20	0.750	1.250	22.000	61.4
PF2200-D-H	22	29.50	22.19	27.25	1.375	20	1.000	1.750	24.000	91.5
PF2400-D-H	24	32.00	24.19	29.50	1.375	20	1.000	1.750	26.125	105.0
PF2600-D-H	26	34.25	26.19	31.75	1.375	24	1.000	1.750	28.500	119.0
PF2800-D-H	28	36.50	28.19	34.00	1.375	28	1.000	1.750	30.500	129.0
PF3000-D-H	30	38.75	30.19	36.00	1.375	28	1.000	1.750	32.500	143.0
PF3200-D-H	32	41.75	32.19	38.50	1.625	28	1.125	1.750	34.750	180.0
PF3400-D-H	34	43.75	34.19	40.50	1.625	32	1.125	1.750	36.750	189.0
PF3600-D-H	36	46.00	36.19	42.75	1.625	32	1.125	1.750	38.750	206.0
PF3800-D-H	38	48.75	38.19	45.25	1.625	32	1.125	1.750	40.750	236.0
PF4000-D-H	40	50.75	40.19	47.25	1.625	36	1.125	1.750	43.000	247.0
PF4200-D-H	42	53.00	42.19	49.50	1.625	36	1.250	1.750	45.000	285.0
PF4400-D-H	44	55.25	44.19	51.75	1.625	40	1.250	2.250	47.000	333.0
PF4600-D-H	46	57.25	46.19	53.75	1.625	40	1.250	2.250	49.000	348.0
PF4800-D-H	48	59.50	48.19	56.00	1.625	44	1.375	2.500	51.000	404.0
PF5000-D-H	50	61.75	50.19	58.25	1.875	44	1.375	2.500	53.000	420.0
PF5200-D-H	52	64.00	52.19	60.50	1.875	44	1.375	2.500	55.000	447.0
PF5400-D-H	54	66.25	54.19	62.75	1.875	44	1.375	2.500	57.000	472.0
PF6000-D-H	60	73.00	60.19	69.25	1.875	52	1.500	2.750	63.000	604.0
PF6600-D-H	66	80.00	66.19	76.00	1.875	52	1.500	2.750	69.000	717.0
PF7200-D-H	72	86.50	72.19	82.50	1.875	60	1.500	2.750	75.000	801.0
PF7800-D-H	78	93.00	78.19	89.00	2.125	64	1.750	3.000	81.250	1009.0
PF8400-D-H	84	99.75	84.19	95.50	2.125	64	1.750	3.000	87.500	1158.0
PF9000-D-H	90	106.50	90.19	102.00	2.438	68	2.000	3.200	93.750	1430.0
PF9600-D-H	96	113.25	96.19	108.50	2.438	68	2.000	3.250	100.000	1625.0

Notes:

a. Steel material conforms to the requirements of AWWA C207 specifications. Other material is available upon request.

b. Meets ASME/ANSI Class 150 bolt pattern.

Pressure Ratings: 175psi (4" – 12") 150psi (14" and larger) at atmospheric temperature.

ALL DIMENSIONS ARE IN INCHES UNLESS OTHERWISE STATED.

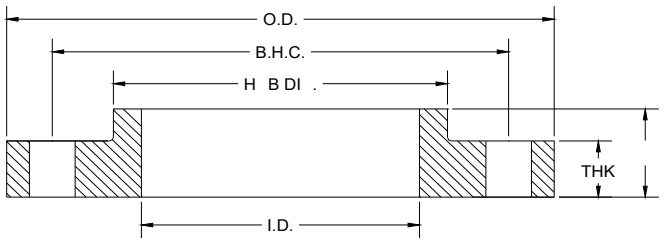



AWWA C207 Class “E” Steel Hub Ring Flange [275 psi]

API Part Number	Size	O.D.	I.D.	Ø B.H.C.	Ø B.H.	# B.H.	THK	L	H.D.	Weight Lbs
PF0400-E-H	4	9.00	4.57	7.50	0.750	8	0.938	1.312	5.312	12.2
PF0500-E-H	5	10.00	5.66	8.50	0.875	8	0.938	1.438	6.438	13.9
PF0600-E-H	6	11.00	6.72	9.50	0.875	8	1.000	1.562	7.562	17.0
PF0800-E-H	8	13.50	8.72	11.75	0.875	8	1.125	1.750	9.688	27.5
PF1000-E-H	10	16.00	10.88	14.25	1.000	12	1.188	1.938	12.000	37.4
PF1200-E-H	12	19.00	12.88	17.00	1.000	12	1.250	2.188	14.375	59.4
PF1400-E-H	14	21.00	14.19	18.75	1.125	12	1.375	2.250	15.750	77.7
PF1600-E-H	16	23.50	16.19	21.25	1.125	16	1.438	2.500	18.000	100.0
PF1800-E-H	18	25.00	18.19	22.75	1.250	16	1.562	2.688	19.875	109.0
PF2000-E-H	20	27.50	20.19	25.00	1.250	20	1.688	2.875	22.000	139.0
PF2200-E-H	22	29.50	22.19	27.25	1.375	20	1.812	3.125	24.000	161.0
PF2400-E-H	24	32.00	24.19	29.50	1.375	20	1.875	3.250	26.125	198.0
PF2600-E-H	26	34.25	26.19	31.75	1.375	24	2.000	3.375	28.500	235.0
PF2800-E-H	28	36.50	28.19	34.00	1.375	28	2.062	3.438	30.750	168.0
PF3000-E-H	30	38.75	30.19	36.00	1.375	28	2.125	3.530	32.750	303.0
PF3200-E-H	32	41.75	32.19	38.50	1.625	28	2.250	3.625	35.000	375.0
PF3400-E-H	34	43.75	34.19	40.50	1.625	32	2.312	3.688	37.000	400.0
PF3600-E-H	36	46.00	36.19	42.75	1.625	32	2.375	3.750	39.250	450.0
PF3800-E-H	38	48.75	38.19	45.25	1.625	32	2.375	3.750	41.750	527.0
PF4000-E-H	40	50.75	40.19	47.25	1.625	36	2.500	3.875	43.750	570.0
PF4200-E-H	42	53.00	42.19	49.50	1.625	36	2.625	4.000	46.000	650.0
PF4400-E-H	44	55.25	44.19	51.75	1.625	40	2.625	4.000	48.000	687.0
PF4600-E-H	46	57.25	46.19	53.75	1.625	40	2.688	4.062	50.000	732.0
PF4800-E-H	48	59.50	48.19	56.00	1.625	44	2.750	4.125	52.250	800.0
PF5000-E-H	50	61.75	50.19	58.25	1.875	44	2.750	4.125	54.250	826.0
PF5200-E-H	52	64.00	52.19	60.50	1.875	44	2.875	4.250	56.500	921.0
PF5400-E-H	54	66.25	54.19	62.75	1.875	44	3.000	4.375	58.750	1022.0
PF6000-E-H	60	73.00	60.19	69.25	1.875	52	3.125	4.500	65.250	1252.0
PF6600-E-H	66	80.00	66.19	76.00	1.875	52	3.375	4.875	71.500	1621.0
PF7200-E-H	72	86.50	72.19	82.50	1.875	60	3.500	5.000	78.500	1919.0
PF7800-E-H	78	93.00	78.19	89.00	2.125	64	3.875	5.375	84.500	2277.0
PF8400-E-H	84	99.75	84.19	95.50	2.125	64	3.875	5.375	90.500	2583.0
PF9000-E-H	90	106.50	90.19	102.00	2.438	68	4.250	5.750	96.750	3076.0
PF9600-E-H	96	113.25	96.19	108.50	2.438	68	4.250	5.750	102.750	3448.0

Notes:

a. Steel material conforms to the requirements of AWWA C207 specifications. Other material is available upon request.

b. Meets ASME/ANSI Class 150 bolt pattern.

Pressure Ratings: 275psi at atmospheric temperature.

ALL DIMENSIONS ARE IN INCHES UNLESS OTHERWISE STATED.

AWWA C228
Flange Specifications
Class: SA, SB, SD, SE, & SF
Domestic (AIS) & Import





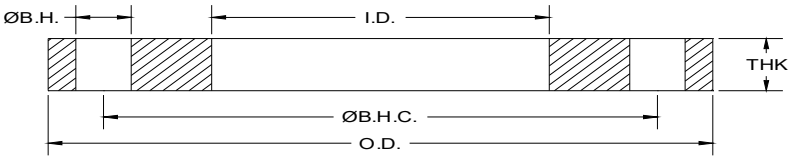



AWWA C228 Class “SA” Stainless Steel-Ring Flanges [50psi]

API Part Number	Size	O.D.	I.D.	Ø B.H.C.	Ø B.H.	# B.H	THK	Weight Lbs
SPF0200-A	2	6.00	2.44	4.75	0.750	4	0.500	3.0
SPF0250-A	2.5	7.00	2.94	5.50	0.750	4	0.500	4.0
SPF0300-A	3	7.50	3.57	6.00	0.750	4	0.500	4.7
SPF0400-A	4	9.00	4.57	7.50	0.750	8	0.500	6.4
SPF0500-A	5	10.00	5.66	8.50	0.875	8	0.500	7.2
SPF0600-A	6	11.00	6.72	9.50	0.875	8	0.500	8.4
SPF0800-A	8	13.50	8.72	11.75	0.875	8	0.500	11.4
SPF1000-A	10	16.00	10.88	14.25	1.000	12	0.625	17.4
SPF1200-A	12	19.00	12.88	17.00	1.000	12	0.625	25.5
SPF1400-A	14	21.00	14.19	18.75	1.125	12	0.625	31.3

Notes:

a. All Stainless Steel flanges available in Dual Grade 304/304L or 316/316L.
Material conforms to the requirements of AWWA C228 specifications.
Other material is available upon request.

b. Meets ASME/ANSI Class 150 bolt pattern.

c. For flanges larger than 14" see AWWA Class "B"

d. Class SB is being sold as the recommended product for sizes 10”, 12”, 14” and meet/exceed the required pressure ratings for Class SA

e. Thickness Spec's (sizes 10", 12", 14"):

i. AWWA Class A requires minimum .625" (+.125;-.000).
ii. AWWA Class B requires minimum .688" (.125"; -.000).

f. AWWA Class A acceptable thickness (sizes 10", 12", 14"): .625 -.750"

Pressure Ratings: 50psi at atmospheric temperature.

ALL DIMENSIONS ARE IN INCHES UNLESS OTHERWISE STATED.

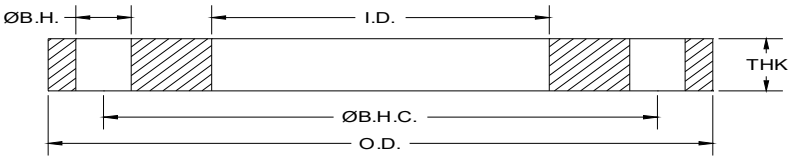



AWWA C228 Class "SB" Stainless Steel-Ring Flanges [86 psi]

API Part Number	Size	O.D.	I.D.	Ø B.H.C.	Ø B.H.	# B.H.	THK	Weight Lbs
SPF0200-B	2	6.00	2.44	4.75	0.750	4	0.625	3.9
SPF0250-B	2.5	7.00	2.94	5.50	0.750	4	0.625	5.3
SPF0300-B	3	7.50	3.57	6.00	0.750	4	0.625	5.7
SPF0400-B	4	9.00	4.57	7.50	0.750	8	0.625	8.1
SPF0500-B	5	10.00	5.66	8.50	0.875	8	0.625	9.1
SPF0600-B	6	11.00	6.72	9.50	0.875	8	0.688	10.7
SPF0800-B	8	13.50	8.72	11.75	0.875	8	0.688	15.7
SPF1000-B	10	16.00	10.88	14.25	1.000	12	0.688	19.3
SPF1200-B	12	19.00	12.88	17.00	1.000	12	0.688	29.3
SPF1400-B	14	21.00	14.19	18.75	1.125	12	0.688	36.2
SPF1600-B	16	23.50	16.19	21.25	1.125	16	0.688	42.2
SPF1800-B	18	25.00	18.19	22.75	1.250	16	0.688	44.8
SPF2000-B	20	27.50	20.19	25.00	1.250	20	0.688	52.1
SPF2200-B	22	29.50	22.19	27.25	1.375	20	0.750	60.9
SPF2400-B	24	32.00	24.19	29.50	1.375	20	0.750	71.0
SPF2600-B	26	34.25	26.19	31.75	1.375	24	0.812	80.0
SPF2800-B	28	36.50	28.19	34.00	1.375	28	0.875	94.0
SPF3000-B	30	38.75	30.19	36.00	1.375	28	0.875	108.0
SPF3200-B	32	41.75	32.19	38.50	1.625	28	0.938	121.0
SPF3400-B	34	43.75	34.19	40.50	1.625	32	0.938	137.0
SPF3600-B	36	46.00	36.19	42.75	1.625	32	1.000	166.0
SPF3800-B	38	48.75	38.19	45.25	1.625	32	1.000	185.0
SPF4000-B	40	50.75	40.19	47.25	1.625	36	1.000	203.0
SPF4200-B	42	53.00	42.19	49.50	1.625	36	1.125	241.0
SPF4400-B	44	55.25	44.19	51.75	1.625	40	1.125	248.0
SPF4600-B	46	57.25	46.19	53.75	1.625	40	1.125	259.0
SPF4800-B	48	59.50	48.19	56.00	1.625	44	1.250	285.0
SPF5000-B	50	61.75	50.19	58.25	1.875	44	1.250	316.0
SPF5200-B	52	64.00	52.19	60.50	1.875	44	1.250	338.0
SPF5400-B	54	66.25	54.19	62.75	1.875	44	1.375	397.0
SPF6000-B	60	73.00	60.19	69.25	1.875	52	1.500	472.0

Notes:

a. All Stainless Steel flanges available in Dual Grade 304/304L or 316/316L. Material conforms to the requirements of AWWA C228 specifications. Other material is available upon request.

b. Meets ASME/ANSI Class 150 bolt pattern.

c. For flanges in smaller sizes see section 5: ANSI/ASME B16.5

Pressure Ratings: 86psi at atmospheric temperature.

ALL DIMENSIONS ARE IN INCHES UNLESS OTHERWISE STATED.

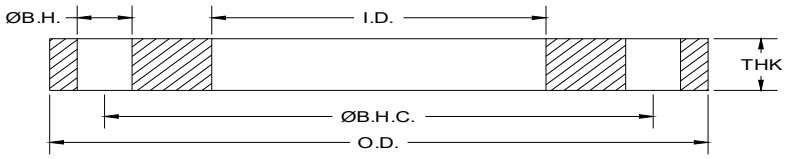



AWWA C228 Class "SD" Stainless Steel-Ring Flanges [150-175 psi]

API Part Number	Size	O.D.	I.D.	Ø B.H.C.	Ø B.H.	# B.H.	THK	Weight Lbs
SPF0200-D	2	6.00	2.44	4.75	0.750	4	0.625	3.9
SPF0250-D	2.5	7.00	2.94	5.50	0.750	4	0.625	5.3
SPF0300-D	3	7.50	3.57	6.00	0.750	4	0.625	5.7
SPF0400-D	4	9.00	4.57	7.50	0.750	8	0.625	8.1
SPF0500-D	5	10.00	5.66	8.50	0.875	8	0.625	9.1
SPF0600-D	6	11.00	6.72	9.50	0.875	8	0.688	10.7
SPF0800-D	8	13.50	8.72	11.75	0.875	8	0.688	15.7
SPF1000-D	10	16.00	10.88	14.25	1.000	12	0.688	19.3
SPF1200-D	12	19.00	12.88	17.00	1.000	12	0.812	33.9
SPF1400-D	14	21.00	14.19	18.75	1.125	12	0.938	47.3
SPF1600-D	16	23.50	16.19	21.25	1.125	16	1.000	60.8
SPF1800-D	18	25.00	18.19	22.75	1.250	16	1.062	65.2
SPF2000-D	20	27.50	20.19	25.00	1.250	20	1.125	81.2
SPF2200-D	22	29.50	22.19	27.25	1.375	20	1.188	90.8
SPF2400-D	24	32.00	24.19	29.50	1.375	20	1.250	112.0
SPF2600-D	26	34.25	26.19	31.75	1.375	24	1.312	132.0
SPF2800-D	28	36.50	28.19	34.00	1.375	28	1.312	148.0
SPF3000-D	30	38.75	30.19	36.00	1.375	28	1.375	169.0
SPF3200-D	32	41.75	32.19	38.50	1.625	28	1.500	211.0
SPF3400-D	34	43.75	34.19	40.50	1.625	32	1.500	219.0
SPF3600-D	36	46.00	36.19	42.75	1.625	32	1.625	265.0
SPF3800-D	38	48.75	38.19	45.25	1.625	32	1.625	300.0
SPF4000-D	40	50.75	40.19	47.25	1.625	36	1.625	311.0
SPF4200-D	42	53.00	42.19	49.50	1.625	36	1.750	362.0
SPF4400-D	44	55.25	44.19	51.75	1.625	40	1.750	385.0
SPF4600-D	46	57.25	46.19	53.75	1.625	40	1.750	404.0
SPF4800-D	48	59.50	48.19	56.00	1.625	44	1.875	457.0
SPF5000-D	50	61.75	50.19	58.25	1.875	44	2.000	505.0
SPF5200-D	52	64.00	52.19	60.50	1.875	44	2.000	539.0
SPF5400-D	54	66.25	54.19	62.75	1.875	44	2.125	611.0
SPF6000-D	60	73.00	60.19	69.25	1.875	52	2.250	760.0
SPF6600-D	66	80.00	66.19	76.00	1.875	52	2.500	1021.0
SPF7200-D	72	86.50	72.19	82.50	1.875	60	2.625	1203.0

Notes:

a. All Stainless Steel flanges available in Dual Grade 304/304L or 316/316L. Material conforms to the requirements of AWWA C228 specifications. Other material is available upon request.

b. Meets ASME/ANSI Class 150 bolt pattern.

c. For flanges in smaller sizes see section 5: ANSI/ASME B16.5

Pressure Ratings: 175psi (4" – 12") and 150psi (14" and larger) at atmospheric temperature.

ALL DIMENSIONS ARE IN INCHES UNLESS OTHERWISE STATED.

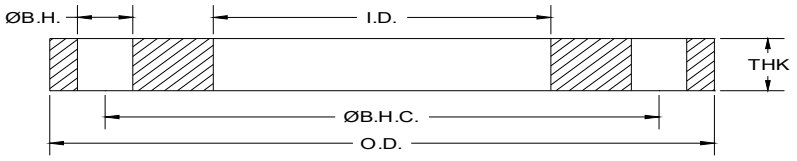



AWWA C228 Class "SE" Stainless Steel-Ring Flanges [275 psi]

API Part Number	Size	O.D.	I.D.	Ø B.H.C.	Ø B.H.	# B.H.	THK	Weight Lbs
SPF0200-E	2	6.00	2.44	4.75	0.750	4	1.125	6.9
SPF0250-E	2.5	7.00	2.94	5.50	0.750	4	1.125	9.5
SPF0300-E	3	7.50	3.57	6.00	0.750	4	1.125	10.3
SPF0400-E	4	9.00	4.57	7.50	0.750	8	1.125	14.1
SPF0500-E	5	10.00	5.66	8.50	0.875	8	1.188	16.7
SPF0600-E	6	11.00	6.72	9.50	0.875	8	1.313	21.1
SPF0800-E	8	13.50	8.72	11.75	0.875	8	1.500	34.4
SPF1000-E	10	16.00	10.88	14.25	1.000	12	1.563	45.9
SPF1200-E	12	19.00	12.88	17.00	1.000	12	1.750	72.3
SPF1400-E	14	21.00	14.19	18.75	1.125	12	1.875	97.7
SPF1600-E	16	23.50	16.19	21.25	1.125	16	2.000	123.4
SPF1800-E	18	25.00	18.19	22.75	1.250	16	2.125	130.0
SPF2000-E	20	27.50	20.19	25.00	1.250	20	2.375	171.0
SPF2200-E	22	29.50	22.19	27.25	1.375	20	2.500	189.0
SPF2400-E	24	32.00	24.19	29.50	1.375	20	2.625	234.0
SPF2600-E	26	34.25	26.19	31.75	1.375	24	2.750	270.0
SPF2800-E	28	36.50	28.19	34.00	1.375	28	2.750	296.0
SPF3000-E	30	38.75	30.19	36.00	1.375	28	2.875	350.0
SPF3200-E	32	41.75	32.19	38.50	1.625	28	3.000	396.0
SPF3400-E	34	43.75	34.19	40.50	1.625	32	3.000	440.0
SPF3600-E	36	46.00	36.19	42.75	1.625	32	3.125	511.0
SPF3800-E	38	48.75	38.19	45.25	1.625	32	3.125	579.0
SPF4000-E	40	50.75	40.19	47.25	1.625	36	3.250	625.0
SPF4200-E	42	53.00	42.19	49.50	1.625	36	3.375	689.0
SPF4400-E	44	55.25	44.19	51.75	1.625	40	3.375	746.0
SPF4600-E	46	57.25	46.19	53.75	1.625	40	3.438	799.0
SPF4800-E	48	59.50	48.19	56.00	1.625	44	3.500	857.0
SPF5000-E	50	61.75	50.19	58.25	1.875	44	3.500	886.0
SPF5200-E	52	64.00	52.19	60.50	1.875	44	3.625	992.0
SPF5400-E	54	66.25	54.19	62.75	1.875	44	3.750	1082.0
SPF6000-E	60	73.00	60.19	69.25	1.875	52	3.875	1312.0
SPF6600-E	66	80.00	66.19	76.00	1.875	52	4.250	1735.0
SPF7200-E	72	86.50	72.19	82.50	1.875	60	4.375	2004.0

Notes:

a. All Stainless Steel flanges available in Dual Grade 304/304L or 316/316L. Material conforms to the requirements of AWWA C228 specifications. Other material is available upon request.

b. Meets ASME/ANSI Class 150 bolt pattern.

c. flanges in smaller sizes see section 5: ANSI/ASME B16.5

Pressure Ratings: 275psi at atmospheric temperature.

ALL DIMENSIONS ARE IN INCHES UNLESS OTHERWISE STATED.

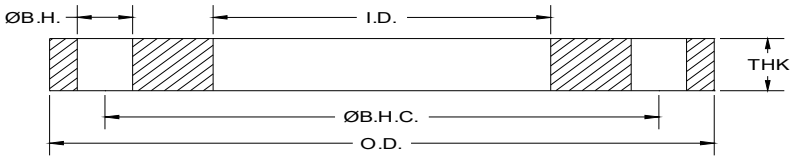



AWWA C228 Class "SF" Stainless Steel-Ring Flanges [300 psi]

API Part Number	Size	O.D.	I.D.	Ø B.H.C.	Ø B.H.	# B.H.	THK	Weight Lbs
SPF0400-F	4	10.00	4.57	7.88	0.875	8	1.130	18.4
SPF0500-F	5	11.00	5.66	9.25	0.875	8	1.210	22.3
SPF0600-F	6	12.50	6.72	10.62	0.875	12	1.310	29.7
SPF0800-F	8	15.00	8.72	13.00	1.000	12	1.310	39.9
SPF1000-F	10	17.50	10.88	15.25	1.125	16	1.500	56.0
SPF1200-F	12	20.50	12.88	17.75	1.250	16	1.630	84.9
SPF1400-F	14	23.00	14.19	20.25	1.250	20	1.940	127.0
SPF1600-F	16	25.50	16.19	22.50	1.375	20	2.140	166.0
SPF1800-F	18	28.00	18.19	24.75	1.375	24	2.250	205.0
SPF2000-F	20	30.50	20.19	27.00	1.375	24	2.330	247.0
SPF2200-F	22	33.00	22.19	29.25	1.625	24	2.500	307.0
SPF2400-F	24	36.00	24.19	32.00	1.625	24	2.690	388.0
SPF2600-F	26	38.25	26.25	34.50	1.875	28	3.000	450.0
SPF2800-F	28	40.75	28.25	37.00	1.875	28	3.130	532.0
SPF3000-F	30	43.00	30.25	39.25	1.875	28	3.150	585.0
SPF3200-F	32	45.25	32.25	41.50	1.875	28	3.250	657.0
SPF3400-F	34	47.50	34.25	43.50	1.875	28	3.380	740.0
SPF3600-F	36	50.00	36.25	46.00	2.125	32	3.460	801.0
SPF3800-F	38	52.25	38.25	48.00	2.125	32	3.500	873.0
SPF4000-F	40	54.25	40.25	50.25	2.125	36	3.630	936.0
SPF4200-F	42	57.00	42.25	52.75	2.125	36	3.810	1102.0
SPF4400-F	44	59.25	44.25	55.00	2.125	36	4.000	1236.0
SPF4600-F	46	61.50	46.25	57.25	2.125	40	4.130	1343.0
SPF4800-F	48	65.00	48.25	60.75	2.125	40	4.500	1717.0

Notes:

a. All Stainless Steel flanges available in Dual Grade 304/304L or 316/316L. Material conforms to the requirements of AWWA C228 specifications. Other material is available upon request.

b. Meets ASME/ANSI Class 300 bolt pattern.

Pressure Ratings: 300 psi at atmospheric temperature.

ALL DIMENSIONS ARE IN INCHES UNLESS OTHERWISE STATED.

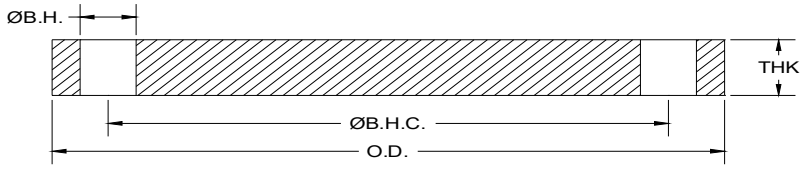



AWWA C228 Class “SA” Stainless Steel Blind Flanges [50 psi]

API Part Number	Size	O.D.	I.D.	Ø B.H.C	Ø B.H.	# B.H.	THK	Weight Lbs
SPFBL0200-A	2	6.00	BLIND	4.75	0.750	4	0.500	4.0
SPFBL0250-A	2.5	7.00	BLIND	5.50	0.750	4	0.500	5.5
SPFBL0300-A	3	7.50	BLIND	6.00	0.750	4	0.500	6.2
SPFBL0350-A	3.5	8.50	BLIND	7.00	0.750	8	0.500	7.5
SPFBL0400-A	4	9.00	BLIND	7.50	0.750	8	0.500	9.1
SPFBL0500-A	5	10.00	BLIND	8.50	0.875	8	0.500	11.0
SPFBL0600-A	6	11.00	BLIND	9.50	0.875	8	0.500	14.3
SPFBL0800-A	8	13.50	BLIND	11.75	0.875	8	0.500	20.0

Notes:

a. All Stainless Steel flanges available in Dual Grade 304/304L or 316/316L. Material conforms to the requirements of AWWA C228 specifications. Other material is available upon request.

b. Meets ASME/ANSI Class 150 bolt pattern.

c. For flanges larger than 8" see AWWA Class "B".

Pressure Ratings: 50psi at atmospheric temperature.

ALL DIMENSIONS ARE IN INCHES UNLESS OTHERWISE STATED.

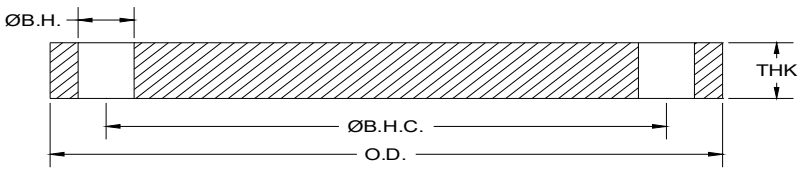



AWWA C228 Class "SB" Stainless Steel Blind Flanges (86 psi)

API Part Number	Size	O.D.	I.D.	Ø B.H.C.	Ø B.H.	# B.H.	THK	Weight Lbs
SPFBL0400-B	4	9.00	BLIND	7.50	0.750	8	0.625	11.0
SPFBL0500-B	5	10.00	BLIND	8.50	0.875	8	0.625	13.0
SPFBL0600-B	6	11.00	BLIND	9.50	0.875	8	0.688	18.0
SPFBL0800-B	8	13.50	BLIND	11.75	0.875	8	0.688	27.0
SPFBL1000-B	10	16.00	BLIND	14.25	1.000	12	0.688	38.0
SPFBL1200-B	12	19.00	BLIND	17.00	1.000	12	0.719	56.0
SPFBL1400-B	14	21.00	BLIND	18.75	1.125	12	0.791	75.0
SPFBL1600-B	16	23.50	BLIND	21.25	1.125	16	0.892	105.0
SPFBL1800-B	18	25.00	BLIND	22.75	1.250	16	0.950	126.0
SPFBL2000-B	20	27.50	BLIND	25.00	1.250	20	1.040	167.0
SPFBL2200-B	22	29.50	BLIND	27.25	1.375	20	1.132	209.0
SPFBL2400-B	24	32.00	BLIND	29.50	1.375	20	1.216	267.0
SPFBL2600-B	26	34.25	BLIND	31.75	1.375	24	1.307	327.0
SPFBL2800-B	28	36.50	BLIND	34.00	1.375	28	1.398	397.0
SPFBL3000-B	30	38.75	BLIND	36.00	1.375	28	1.477	475.0
SPFBL3200-B	32	41.75	BLIND	38.50	1.625	28	1.581	586.0
SPFBL3400-B	34	43.75	BLIND	40.50	1.625	32	1.661	675.0
SPFBL3600-B	36	46.00	BLIND	42.75	1.625	32	1.751	790.0
SPFBL3800-B	38	48.75	BLIND	45.25	1.625	32	1.853	944.0
SPFBL4000-B	40	50.75	BLIND	47.25	1.625	36	1.933	1066.0
SPFBL4200-B	42	53.00	BLIND	49.50	1.625	36	2.023	1220.0
SPFBL4400-B	44	55.25	BLIND	51.75	1.625	40	2.114	1385.0
SPFBL4600-B	46	57.25	BLIND	53.75	1.625	40	2.194	1547.0
SPFBL4800-B	48	59.50	BLIND	56.00	1.625	44	2.285	1739.0
SPFBL5000-B	50	61.75	BLIND	58.25	1.875	44	2.377	1934.0
SPFBL5200-B	52	64.00	BLIND	60.50	1.875	44	2.468	2163.0
SPFBL5400-B	54	66.25	BLIND	62.75	1.875	44	2.559	2408.0
SPFBL6000-B	60	73.00	BLIND	69.25	1.875	52	2.820	3225.0
SPFBL6600-B	66	80.00	BLIND	76.00	1.875	52	3.092	4272.0
SPFBL7200-B	72	86.50	BLIND	82.50	1.875	60	3.353	5418.0

Notes:

a. All Stainless Steel flanges available in Dual Grade 304/304L or 316/316L.
Material conforms to the requirements of AWWA C228 specifications.
Other material is available upon request.

b. Meets ASME/ANSI Class 150 bolt pattern.

c. AWWA recommends the use of Dish Assemblies for sizes above 72". Call API customer service for additional information.

Pressure Ratings: 86psi at atmospheric temperature.

ALL DIMENSIONS ARE IN INCHES UNLESS OTHERWISE STATED.

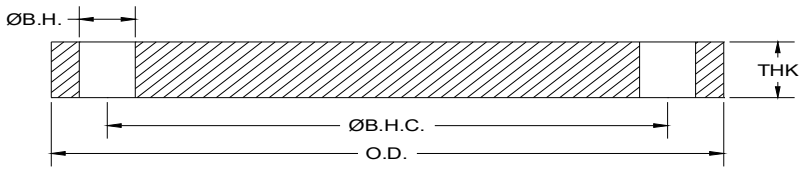

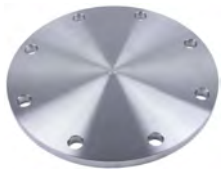

AWWA C228 Class "SD" Stainless Steel Blind Flanges - 1986 Spec's

API Part Number	Size	O.D.	I.D.	Ø B.H.C.	Ø B.H.	# B.H.	THK	Weight Lbs
SPFBL0400-86	4	9.00	BLIND	7.50	0.750	8	0.625	11.0
SPFBL0500-86	5	10.00	BLIND	8.50	0.875	8	0.625	13.0
SPFBL0600-86	6	11.00	BLIND	9.50	0.875	8	0.688	18.0
SPFBL0800-86	8	13.50	BLIND	11.75	0.875	8	0.688	27.0
SPFBL1000-86	10	16.00	BLIND	14.25	1.000	12	0.688	38.0
SPFBL1200-86	12	19.00	BLIND	17.00	1.000	12	0.813	64.0
SPFBL1400-86	14	21.00	BLIND	18.75	1.125	12	0.938	88.0
SPFBL1600-86	16	23.50	BLIND	21.25	1.125	16	1.000	118.0
SPFBL1800-86	18	25.00	BLIND	22.75	1.250	16	1.063	141.0
SPFBL2000-86	20	27.50	BLIND	25.00	1.250	20	1.125	181.0
SPFBL2400-86	24	32.00	BLIND	29.50	1.375	20	1.250	273.0
SPFBL3000-86	30	38.75	BLIND	36.00	1.375	28	1.375	436.0
SPFBL3600-86	36	46.00	BLIND	42.75	1.625	32	1.625	735.0
SPFBL4200-86	42	53.00	BLIND	49.50	1.625	36	1.750	1057.0
SPFBL4800-86	48	59.50	BLIND	56.00	1.625	44	1.875	1428.0
SPFBL6000-86	60	73.00	BLIND	69.25	1.875	52	2.250	2574.0

Notes:

a. All Stainless Steel flanges available in Dual Grade 304/304L or 316/316L.
Material conforms to the requirements of AWWA C228 specifications.
Other material is available upon request.

b. Meets ASME/ANSI Class 150 bolt pattern.

c. Manufactured to AWWA C207-1986 dimensional specifications.

d. AWWA recommends the use of Dish Assemblies for sizes above 72". Call API customer service for additional information.

ALL DIMENSIONS ARE IN INCHES UNLESS OTHERWISE STATED.

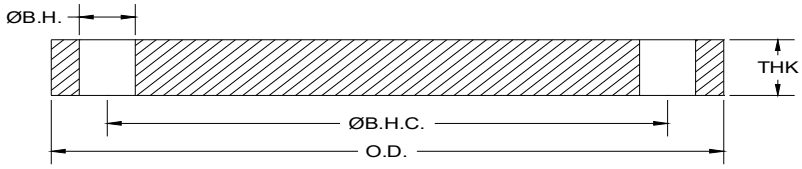



AWWA C228 Class "SD" Stainless Steel Blind Flanges [150-175 psi]

API Part Number	Size	O.D.	I.D.	Ø B.H.C.	Ø B.H.	# B.H.	THK	Weight Lbs
SPFBL0400-D	4	9.00	BLIND	7.50	0.750	8	0.625	11.0
SPFBL0500-D	5	10.00	BLIND	8.50	0.875	8	0.650	13.1
SPFBL0600-D	6	11.00	BLIND	9.50	0.875	8	0.693	18.1
SPFBL0800-D	8	13.50	BLIND	11.75	0.875	8	0.813	31.0
SPFBL1000-D	10	16.00	BLIND	14.25	1.000	12	0.953	52.0
SPFBL1200-D	12	19.00	BLIND	17.00	1.000	12	1.117	87.0
SPFBL1400-D	14	21.00	BLIND	18.75	1.125	12	1.133	107.0
SPFBL1600-D	16	23.50	BLIND	21.25	1.125	16	1.265	150.0
SPFBL1800-D	18	25.00	BLIND	22.75	1.250	16	1.331	178.0
SPFBL2000-D	20	27.50	BLIND	25.00	1.250	20	1.448	234.0
SPFBL2200-D	22	29.50	BLIND	27.25	1.375	20	1.568	290.0
SPFBL2400-D	24	32.00	BLIND	29.50	1.375	20	1.661	365.0
SPFBL2600-D	26	34.25	BLIND	31.75	1.375	24	1.786	447.0
SPFBL2800-D	28	36.50	BLIND	34.00	1.375	28	1.906	542.0
SPFBL3000-D	30	38.75	BLIND	36.00	1.375	28	2.008	647.0
SPFBL3200-D	32	41.75	BLIND	38.50	1.625	28	2.150	798.0
SPFBL3400-D	34	43.75	BLIND	40.50	1.625	32	2.252	916.0
SPFBL3600-D	36	46.00	BLIND	42.75	1.625	32	2.370	1071.0
SPFBL3800-D	38	48.75	BLIND	45.25	1.625	32	2.506	1277.0
SPFBL4000-D	40	50.75	BLIND	47.25	1.625	36	2.609	1439.0
SPFBL4200-D	42	53.00	BLIND	49.50	1.625	36	2.729	1648.0
SPFBL4400-D	44	55.25	BLIND	51.75	1.625	40	2.849	1867.0
SPFBL4600-D	46	57.25	BLIND	53.75	1.625	40	2.952	2082.0
SPFBL4800-D	48	59.50	BLIND	56.00	1.625	44	3.072	2340.0
SPFBL5000-D	50	61.75	BLIND	58.25	1.875	44	3.196	2600.0
SPFBL5200-D	52	64.00	BLIND	60.50	1.875	44	3.315	2906.0
SPFBL5400-D	54	66.25	BLIND	62.75	1.875	44	3.435	3235.0
SPFBL6000-D	60	73.00	BLIND	69.25	1.875	52	3.779	4328.0
SPFBL6600-D	66	80.00	BLIND	76.00	1.875	52	4.136	5719.0
SPFBL7200-D	72	86.50	BLIND	82.50	1.875	60	4.480	7245.0

Notes:

a. All Stainless Steel flanges available in Dual Grade 304/304L or 316/316L.
Material conforms to the requirements of AWWA C228 specifications.
Other material is available upon request.

b. Meets ASME/ANSI Class 150 bolt pattern.

c. AWWA recommends the use of Dish Assemblies for sizes above 72". Call API customer service for additional information.

Pressure Ratings: 175psi (4" – 12") and 150psi (14" and larger) at atmospheric temperature.

ALL DIMENSIONS ARE IN INCHES UNLESS OTHERWISE STATED.

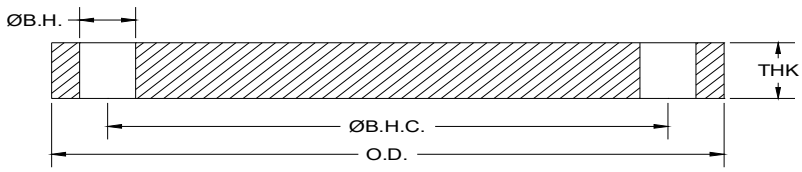



AWWA C228 Class "SE" Stainless Steel Blind Flanges [275psi]

API Part Number	Size	O.D.	I.D.	Ø B.H.C.	Ø B.H.	# B.H.	THK	Weight Lbs
SPFBL0400-E	4	9.00	BLIND	7.50	0.750	8	1.125	19.0
SPFBL0500-E	5	10.00	BLIND	8.50	0.875	8	1.188	24.0
SPFBL0600-E	6	11.00	BLIND	9.50	0.875	8	1.313	33.0
SPFBL0800-E	8	13.50	BLIND	11.75	0.875	8	1.500	58.0
SPFBL1000-E	10	16.00	BLIND	14.25	1.000	12	1.563	84.0
SPFBL1200-E	12	19.00	BLIND	17.00	1.000	12	1.750	135.0
SPFBL1400-E	14	21.00	BLIND	18.75	1.125	12	1.875	176.0
SPFBL1600-E	16	23.50	BLIND	21.25	1.125	16	2.000	234.0
SPFBL1800-E	18	25.00	BLIND	22.75	1.250	16	2.125	283.0
SPFBL2000-E	20	27.50	BLIND	25.00	1.250	20	2.375	382.0
SPFBL2200-E	22	29.50	BLIND	27.25	1.375	20	2.500	462.0
SPFBL2400-E	24	32.00	BLIND	29.50	1.375	20	2.625	575.0
SPFBL2600-E	26	34.25	BLIND	31.75	1.375	24	2.750	689.0
SPFBL2800-E	28	36.50	BLIND	34.00	1.375	28	2.750	782.0
SPFBL3000-E	30	38.75	BLIND	36.00	1.375	28	2.875	926.0
SPFBL3200-E	32	41.75	BLIND	38.50	1.625	28	3.000	1113.0
SPFBL3400-E	34	43.75	BLIND	40.50	1.625	32	3.050	1241.0
SPFBL3600-E	36	46.00	BLIND	42.75	1.625	32	3.209	1450.0
SPFBL3800-E	38	48.75	BLIND	45.25	1.625	32	3.394	1730.0
SPFBL4000-E	40	50.75	BLIND	47.25	1.625	36	3.533	1949.0
SPFBL4200-E	42	53.00	BLIND	49.50	1.625	36	3.695	2230.0
SPFBL4400-E	44	55.25	BLIND	51.75	1.625	40	3.857	2528.0
SPFBL4600-E	46	57.25	BLIND	53.75	1.625	40	3.997	2819.0
SPFBL4800-E	48	59.50	BLIND	56.00	1.625	44	4.159	3167.0
SPFBL5000-E	50	61.75	BLIND	58.25	1.875	44	4.327	3520.0
SPFBL5200-E	52	64.00	BLIND	60.50	1.875	44	4.489	3935.0
SPFBL5400-E	54	66.25	BLIND	62.75	1.875	44	4.651	4380.0
SPFBL6000-E	60	73.00	BLIND	69.25	1.875	52	5.116	5855.0
SPFBL6600-E	66	80.00	BLIND	76.00	1.875	52	5.601	7745.0
SPFBL7200-E	72	86.50	BLIND	82.50	1.875	60	6.066	9810.0

Notes:

a. All Stainless Steel flanges available in Dual Grade 304/304L or 316/316L.
Material conforms to the requirements of AWWA C228 specifications.
Other material is available upon request.

b. Meets ASME/ANSI Class 150 bolt pattern.

c. AWWA recommends the use of Dish Assemblies for sizes above 72". Call API customer service for additional information.

Pressure Ratings: 275psi at atmospheric temperature.

ALL DIMENSIONS ARE IN INCHES UNLESS OTHERWISE STATED.

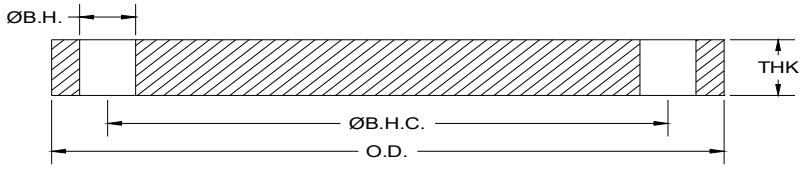



AWWA C228 Class "SF" Stainless Steel Blind Flanges [300 psi]

API Part Number	Size	O.D.	I.D.	Ø B.H.C.	Ø B.H.	# B.H.	THK	Weight Lbs
SPFBL0400-F	4	10.00	BLIND	7.88	0.875	8	1.130	23.0
SPFBL0500-F	5	11.00	BLIND	9.25	0.875	8	1.210	31.0
SPFBL0600-F	6	12.50	BLIND	10.62	0.875	12	1.310	43.0
SPFBL0800-F	8	15.00	BLIND	13.00	1.000	12	1.310	62.0
SPFBL1000-F	10	17.50	BLIND	15.25	1.125	16	1.500	96.0
SPFBL1200-F	12	20.50	BLIND	17.75	1.250	16	1.630	143.0
SPFBL1400-F	14	23.00	BLIND	20.25	1.250	20	1.940	214.0
SPFBL1600-F	16	25.50	BLIND	22.50	1.375	20	2.140	291.0
SPFBL1800-F	18	28.00	BLIND	24.75	1.375	24	2.250	369.0
SPFBL2000-F	20	30.50	BLIND	27.00	1.375	24	2.330	458.0
SPFBL2200-F	22	33.00	BLIND	29.25	1.625	24	2.500	580.0
SPFBL2400-F	24	36.00	BLIND	32.00	1.625	24	2.690	737.0
SPFBL2600-F	26	38.25	BLIND	34.50	1.875	28	3.000	910.0
SPFBL2800-F	28	40.75	BLIND	37.00	1.875	28	3.130	1087.0
SPFBL3000-F	30	43.00	BLIND	39.25	1.875	28	3.166	1232.0
SPFBL3200-F	32	45.25	BLIND	41.50	1.875	28	3.332	1444.0
SPFBL3400-F	34	47.50	BLIND	43.50	1.875	28	3.475	1667.0
SPFBL3600-F	36	50.00	BLIND	46.00	2.125	32	3.671	1923.0
SPFBL3800-F	38	52.25	BLIND	48.00	2.125	32	3.815	2193.0
SPFBL4000-F	40	54.25	BLIND	50.25	2.125	36	3.982	2462.0
SPFBL4200-F	42	57.00	BLIND	52.75	2.125	36	4.171	2863.0
SPFBL4400-F	44	59.25	BLIND	55.00	2.125	36	4.338	3230.0
SPFBL4600-F	46	61.50	BLIND	57.25	2.125	40	4.505	3608.0
SPFBL4800-F	48	65.00	BLIND	60.75	2.125	40	4.781	4300.0

Notes:

a. All Stainless Steel flanges available in Dual Grade 304/304L or 316/316L. Material conforms to the requirements of AWWA C228 specifications. Other material is available upon request.

b. Meets ASME/ANSI Class 300 bolt pattern.

Pressure Ratings: 300psi at atmospheric temperature.

ALL DIMENSIONS ARE IN INCHES UNLESS OTHERWISE STATED.

ANSI/ASME B16.5
Class 150#
Flanges

Domestic (AIS) & Import








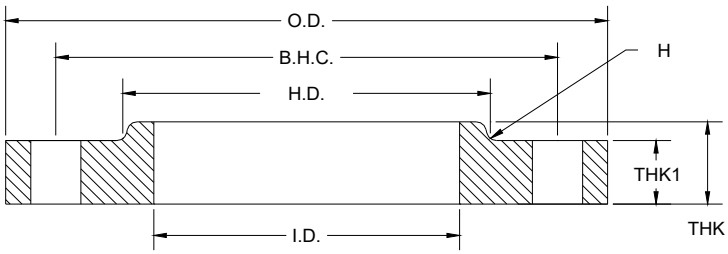



ANSI/ASME B16.5 Class 150
Forged Steel Flat Face Slip-on Flanges

API Part Number	Size	O.D.	I.D.	Ø B.H.C.	Ø B.H.	# B.H.	THK1	THK2	H.D.	Weight Lbs
FFS0050	0.5	3.50	0.88	2.38	0.630	4	0.440	0.630	1.190	1.2
FFS0075	0.75	3.88	1.09	2.75	0.630	4	0.500	0.630	1.500	1.6
FFS0100	1	4.25	1.36	3.13	0.630	4	0.563	0.690	1.940	2.0
FFS0125	1.25	4.63	1.70	3.50	0.630	4	0.630	0.813	2.313	3.0
FFS0150	1.5	5.00	1.95	3.88	0.630	4	0.690	0.880	2.563	3.0
FFS0200	2	6.00	2.44	4.75	0.750	4	0.750	1.000	3.063	5.0
FFS0250	2.5	7.00	2.94	5.50	0.750	4	0.880	1.130	3.563	8.0
FFS0300	3	7.50	3.57	6.00	0.750	4	0.940	1.190	4.250	9.0
FFS0350	3.5	8.50	4.07	7.00	0.750	8	0.940	1.250	4.810	10.5
FFS0400	4	9.00	4.57	7.50	0.750	8	0.940	1.313	5.312	13.0
FFS0500	5	10.00	5.66	8.50	0.875	8	0.940	1.440	6.440	15.0
FFS0600	6	11.00	6.72	9.50	0.875	8	1.000	1.563	7.563	17.0
FFS0800	8	13.50	8.72	11.75	0.875	8	1.130	1.750	9.690	28.0
FFS1000	10	16.00	10.88	14.25	1.000	12	1.190	1.940	12.000	40.0
FFS1200	12	19.00	12.88	17.00	1.000	12	1.250	2.190	14.380	61.0
FFS1400	14	21.00	14.14	18.75	1.125	12	1.380	2.250	15.750	83.0
FFS1600	16	23.50	16.16	21.25	1.125	16	1.440	2.500	18.000	106.0
FFS1800	18	25.00	18.18	22.75	1.250	16	1.563	2.690	19.880	109.0
FFS2000	20	27.50	20.20	25.00	1.250	20	1.690	2.880	22.000	148.0
FFS2200	22	29.50	22.22	27.25	1.375	20	1.840	3.130	24.250	185.0
FFS2400	24	32.00	24.25	29.50	1.375	20	1.880	3.250	26.130	204.0

Notes:

a. Dimensions and Tolerances per ASME/ANSI B16.5 Class 150.

b. Material meets ASTM A105 Forged Steel requirements.

c. Flanges are painted black.

ALL DIMENSIONS ARE IN INCHES UNLESS OTHERWISE STATED.

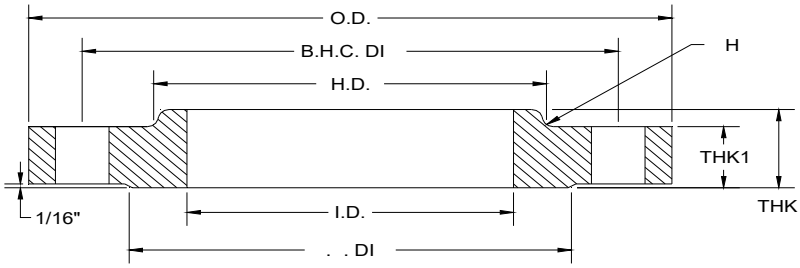



ANSI/ASME B16.5 Class 150
Forged Steel Raised Face Slip-on Flanges

API Part Number	Size	O.D.	I.D.	Ø B.H.C.	Ø B.H.	# B.H.	THK1	THK2	H.D.	RF DIA	RH (RAD)	Weight Lbs
RFS0050	0.5	3.50	0.88	2.38	0.630	4	0.440	0.630	1.190	1.375	0.188	1.2
RFS0075	0.75	3.88	1.09	2.75	0.630	4	0.500	0.630	1.500	1.688	0.188	1.6
RFS0100	1	4.25	1.36	3.13	0.630	4	0.563	0.690	1.940	2.000	0.188	2.0
RFS0125	1.25	4.63	1.70	3.50	0.630	4	0.630	0.813	2.313	2.500	0.188	3.0
RFS0150	1.5	5.00	1.95	3.88	0.630	4	0.690	0.880	2.563	2.875	0.188	3.0
RFS0200	2	6.00	2.44	4.75	0.750	4	0.750	1.000	3.063	3.625	0.188	5.0
RFS0250	2.5	7.00	2.94	5.50	0.750	4	0.880	1.130	3.563	4.125	0.188	8.0
RFS0300	3	7.50	3.57	6.00	0.750	4	0.940	1.190	4.250	5.000	0.188	9.0
RFS0350	3.5	8.50	4.07	7.00	0.750	8	0.940	1.250	4.810	5.500	0.188	10.5
RFS0400	4	9.00	4.57	7.50	0.750	8	0.940	1.313	5.312	6.188	0.188	13.0
RFS0500	5	10.00	5.66	8.50	0.875	8	0.940	1.440	6.440	7.313	0.188	15.0
RFS0600	6	11.00	6.72	9.50	0.875	8	1.000	1.563	7.563	8.500	0.250	17.0
RFS0800	8	13.50	8.72	11.75	0.875	8	1.130	1.750	9.690	10.625	0.250	28.0
RFS1000	10	16.00	10.88	14.25	1.000	12	1.190	1.940	12.000	12.750	0.250	40.0
RFS1200	12	19.00	12.88	17.00	1.000	12	1.250	2.190	14.380	15.000	0.313	61.0
RFS1400	14	21.00	14.14	18.75	1.125	12	1.380	2.250	15.750	16.250	0.313	83.0
RFS1600	16	23.50	16.16	21.25	1.125	16	1.440	2.500	18.000	18.500	0.313	106.0
RFS1800	18	25.00	18.18	22.75	1.250	16	1.563	2.690	19.880	21.000	0.313	109.0
RFS2000	20	27.50	20.20	25.00	1.250	20	1.690	2.880	22.000	23.000	0.313	148.0
RFS2200	22	29.50	22.22	27.25	1.375	20	1.840	3.130	24.250	25.250	0.313	185.0
RFS2400	24	32.00	24.25	29.50	1.375	20	1.880	3.250	26.130	27.250	0.313	204.0

Notes:

a. Dimensions and Tolerances per ASME/ANSI B16.5 Class 150.

b. Material meets ASTM A105 Forged Steel requirements.

c. Flanges are painted black.

ALL DIMENSIONS ARE IN INCHES UNLESS OTHERWISE STATED.

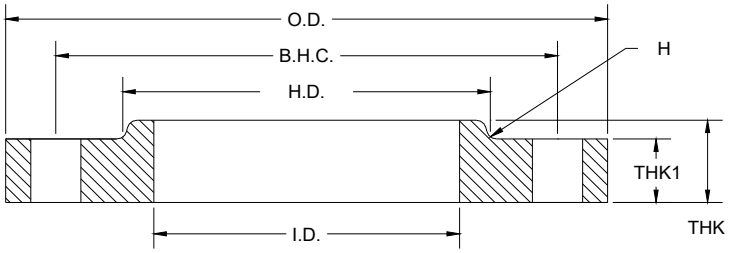



ANSI/ASME B16.5 Class 150
Forged Stainless Steel Flat Face Slip-on Flanges

API Part Number	Size	O.D.	I.D.	Ø B.H.C.	Ø B.H.	# B.H.	THK1	THK2	H.D.	Weight Lbs
SFFS0050	0.5	3.50	0.88	2.38	0.630	4	0.440	0.630	1.190	1.2
SFFS0075	0.75	3.88	1.09	2.75	0.630	4	0.500	0.630	1.500	1.6
SFFS0100	1	4.25	1.36	3.13	0.630	4	0.563	0.690	1.940	2.0
SFFS0125	1.25	4.63	1.70	3.50	0.630	4	0.630	0.813	2.313	3.0
SFFS0150	1.5	5.00	1.95	3.88	0.630	4	0.690	0.880	2.563	3.0
SFFS0200	2	6.00	2.44	4.75	0.750	4	0.750	1.000	3.063	5.0
SFFS0250	2.5	7.00	2.94	5.50	0.750	4	0.880	1.130	3.563	8.0
SFFS0300	3	7.50	3.57	6.00	0.750	4	0.940	1.190	4.250	9.0
SFFS0350	3.5	8.50	4.07	7.00	0.750	8	0.940	1.250	4.810	11.0
SFFS0400	4	9.00	4.57	7.50	0.750	8	0.940	1.313	5.312	13.0
SFFS0500	5	10.00	5.66	8.50	0.875	8	0.940	1.440	6.440	15.0
SFFS0600	6	11.00	6.72	9.50	0.875	8	1.000	1.563	7.563	17.0
SFFS0800	8	13.50	8.72	11.75	0.875	8	1.130	1.750	9.690	28.0
SFFS1000	10	16.00	10.88	14.25	1.000	12	1.190	1.940	12.000	40.0
SFFS1200	12	19.00	12.88	17.00	1.000	12	1.250	2.190	14.380	61.0
SFFS1400	14	21.00	14.14	18.75	1.125	12	1.380	2.250	15.750	83.0
SFFS1600	16	23.50	16.16	21.25	1.125	16	1.440	2.500	18.000	106.0
SFFS1800	18	25.00	18.18	22.75	1.250	16	1.563	2.690	19.880	109.0
SFFS2000	20	27.50	20.20	25.00	1.250	20	1.690	2.880	22.000	148.0
SFFS2200	22	29.50	22.22	27.25	1.375	20	1.840	3.130	24.250	174.0
SFFS2400	24	32.00	24.25	29.50	1.375	20	1.880	3.250	26.130	204.0

Notes:

a. Dimensions and Tolerances per ASME/ANSI B16.5 Class 150.

b. Material meets ASTM A182 Forged Steel requirements.

c. All Stainless Steel flanges available in Dual Grade 304/304L or 316/316L.

ALL DIMENSIONS ARE IN INCHES UNLESS OTHERWISE STATED.

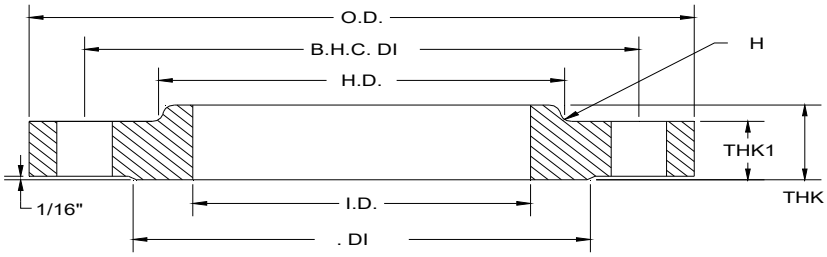



ANSI/ASME B16.5 Class 150
Forged Stainless Steel Raised Face Slip-on Flanges

API Part Number	Size	O.D.	I.D.	Ø B.H.C.	Ø B.H.	# B.H.	THK1	THK2	H.D.	RF DIA	RH (RAD)	Weight Lbs
SRFS0050	0.5	3.50	0.88	2.38	0.630	4	0.440	0.630	1.190	1.375	0.188	1.2
SRFS0075	0.75	3.88	1.09	2.75	0.630	4	0.500	0.630	1.500	1.688	0.188	1.6
SRFS0100	1	4.25	1.36	3.13	0.630	4	0.563	0.690	1.940	2.000	0.188	2.0
SRFS0125	1.25	4.63	1.70	3.50	0.630	4	0.630	0.813	2.313	2.500	0.188	3.0
SRFS0150	1.5	5.00	1.95	3.88	0.630	4	0.690	0.880	2.563	2.875	0.188	3.0
SRFS0200	2	6.00	2.44	4.75	0.750	4	0.750	1.000	3.063	3.625	0.188	5.0
SRFS0250	2.5	7.00	2.94	5.50	0.750	4	0.880	1.130	3.563	4.125	0.188	8.0
SRFS0300	3	7.50	3.57	6.00	0.750	4	0.940	1.190	4.250	5.000	0.188	9.0
SRFS0350	3.5	8.50	4.07	7.00	0.750	8	0.940	1.250	4.810	5.500	0.188	11.0
SRFS0400	4	9.00	4.57	7.50	0.750	8	0.940	1.313	5.312	6.188	0.188	13.0
SRFS0500	5	10.00	5.66	8.50	0.875	8	0.940	1.440	6.440	7.313	0.188	15.0
SRFS0600	6	11.00	6.72	9.50	0.875	8	1.000	1.563	7.563	8.500	0.250	17.0
SRFS0800	8	13.50	8.72	11.75	0.875	8	1.130	1.750	9.690	10.625	0.250	28.0
SRFS1000	10	16.00	10.88	14.25	1.000	12	1.190	1.940	12.000	12.750	0.250	40.0
SRFS1200	12	19.00	12.88	17.00	1.000	12	1.250	2.190	14.380	15.000	0.313	61.0
SRFS1400	14	21.00	14.14	18.75	1.125	12	1.380	2.250	15.750	16.250	0.313	83.0
SRFS1600	16	23.50	16.16	21.25	1.125	16	1.440	2.500	18.000	18.500	0.313	106.0
SRFS1800	18	25.00	18.18	22.75	1.250	16	1.563	2.690	19.880	21.000	0.313	109.0
SRFS2000	20	27.50	20.20	25.00	1.250	20	1.690	2.880	22.000	23.000	0.313	148.0
SRFS2200	22	29.50	22.22	27.25	1.375	20	1.840	3.130	24.250	25.250	0.313	174.0
SRFS2400	24	32.00	24.25	29.50	1.375	20	1.880	3.250	26.130	27.250	0.313	204.0

Notes:

a. Dimensions and Tolerances per ASME/ANSI B16.5 Class 150.

b. Material meets ASTM A182 Forged Steel requirements.

c. All Stainless Steel flanges available in Dual Grade 304/304L or 316/316L.

ALL DIMENSIONS ARE IN INCHES UNLESS OTHERWISE STATED.

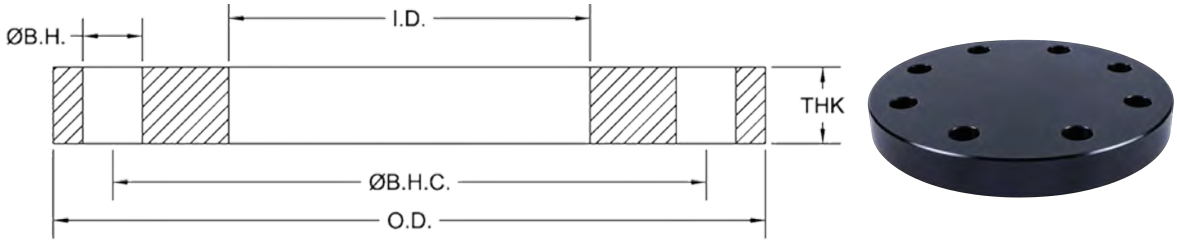

ANSI/ASME B16.5 Class 150
Steel Flat Face Blind Flanges

API Part Number	Size	O.D.	I.D.	Ø B.H.C.	Ø B.H.	# B.H.	THK1	Weight Lbs
FFBL0050	0.5	3.50	BLIND	2.38	0.630	4	0.440	1.0
FFBL0075	0.75	3.88	BLIND	2.75	0.630	4	0.500	1.0
FFBL0100	1	4.25	BLIND	3.13	0.630	4	0.563	2.0
FFBL0125	1.25	4.63	BLIND	3.50	0.630	4	0.630	2.9
FFBL0150	1.5	5.00	BLIND	3.88	0.630	4	0.690	3.5
FFBL0200	2	6.00	BLIND	4.75	0.750	4	0.750	5.0
FFBL0250	2.5	7.00	BLIND	5.50	0.750	4	0.880	9.0
FFBL0300	3	7.50	BLIND	6.00	0.750	4	0.940	9.0
FFBL0350	3.5	8.50	BLIND	7.00	0.750	8	0.940	13.0
FFBL0400	4	9.00	BLIND	7.50	0.750	8	0.940	17.0
FFBL0500	5	10.00	BLIND	8.50	0.875	8	0.940	19.7
FFBL0600	6	11.00	BLIND	9.50	0.875	8	1.000	27.0
FFBL0800	8	13.50	BLIND	11.75	0.875	8	1.130	43.5
FFBL1000	10	16.00	BLIND	14.25	1.000	12	1.190	65.5
FFBL1200	12	19.00	BLIND	17.00	1.000	12	1.250	123.0
FFBL1400	14	21.00	BLIND	18.75	1.125	12	1.380	133.3
FFBL1600	16	23.50	BLIND	21.25	1.125	16	1.440	180.0
FFBL1800	18	25.00	BLIND	22.75	1.250	16	1.563	220.0
FFBL2000	20	27.50	BLIND	25.00	1.250	20	1.690	284.0
FFBL2200	22	29.50	BLIND	27.25	1.375	20	1.840	360.0
FFBL2400	24	32.00	BLIND	29.50	1.375	20	1.880	445.0

Notes:

a. Dimensions and Tolerances per ASME/ANSI B16.5 Class 150.

b. Material meets ASTM A36 or A105 Steel requirements.

c. Flanges are painted black.

ALL DIMENSIONS ARE IN INCHES UNLESS OTHERWISE STATED.

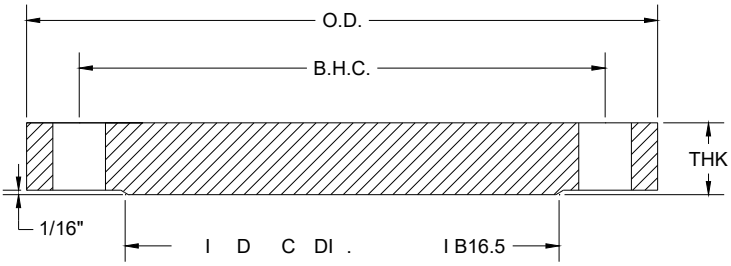



ANSI/ASME B16.5 Class 150
Steel Raised Face Blind Flanges

API Part Number	Size	O.D.	I.D.	Ø B.H.C.	Ø B.H.	# B.H.	THK1	Weight Lbs
RFB0050	0.5	3.50	BLIND	2.38	0.630	4	0.440	1.0
RFB0075	0.75	3.88	BLIND	2.75	0.630	4	0.500	1.0
RFB0100	1	4.25	BLIND	3.13	0.630	4	0.563	2.0
RFB0125	1.25	4.63	BLIND	3.50	0.630	4	0.630	2.9
RFB0150	1.5	5.00	BLIND	3.88	0.630	4	0.690	3.5
RFB0200	2	6.00	BLIND	4.75	0.750	4	0.750	5.0
RFB0250	2.5	7.00	BLIND	5.50	0.750	4	0.880	9.0
RFB0300	3	7.50	BLIND	6.00	0.750	4	0.940	9.0
RFB0350	3.5	8.50	BLIND	7.00	0.750	8	0.940	13.0
RFB0400	4	9.00	BLIND	7.50	0.750	8	0.940	17.0
RFB0500	5	10.00	BLIND	8.50	0.875	8	0.940	19.7
RFB0600	6	11.00	BLIND	9.50	0.875	8	1.000	27.0
RFB0800	8	13.50	BLIND	11.75	0.875	8	1.130	43.5
RFB1000	10	16.00	BLIND	14.25	1.000	12	1.190	65.5
RFB1200	12	19.00	BLIND	17.00	1.000	12	1.250	123.0
RFB1400	14	21.00	BLIND	18.75	1.125	12	1.380	133.3
RFB1600	16	23.50	BLIND	21.25	1.125	16	1.440	180.0
RFB1800	18	25.00	BLIND	22.75	1.250	16	1.563	220.0
RFB2000	20	27.50	BLIND	25.00	1.250	20	1.690	284.0
RFB2200	22	29.50	BLIND	27.25	1.375	20	1.840	360.0
RFB2400	24	32.00	BLIND	29.50	1.375	20	1.880	445.0

Notes:

a. Dimensions and Tolerances per ASME/ANSI B16.5 Class 150.

b. Material meets ASTM A36 or A105 Steel requirements.

c. Flanges are painted black.

ALL DIMENSIONS ARE IN INCHES UNLESS OTHERWISE STATED.

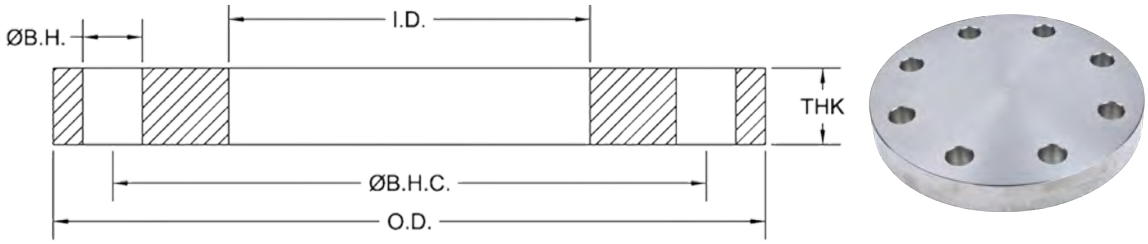

ANSI/ASME B16.5 Class 150
Stainless Steel Flat Face Blind Flanges

API Part Number	Size	O.D.	I.D.	Ø B.H.C.	Ø B.H.	# B.H.	THK	Weight Lbs
SFFBL0050	0.5	3.50	BLIND	2.38	0.630	4	0.440	3.0
SFFBL0075	0.75	3.88	BLIND	2.75	0.630	4	0.500	4.0
SFFBL0100	1	4.25	BLIND	3.13	0.630	4	0.563	4.5
SFFBL0125	1.25	4.63	BLIND	3.50	0.630	4	0.630	5.0
SFFBL0150	1.5	5.00	BLIND	3.88	0.630	4	0.690	5.5
SFFBL0200	2	6.00	BLIND	4.75	0.750	4	0.750	6.0
SFFBL0250	2.5	7.00	BLIND	5.50	0.750	4	0.880	9.0
SFFBL0300	3	7.50	BLIND	6.00	0.750	4	0.940	11.5
SFFBL0350	3.5	8.50	BLIND	7.00	0.750	8	0.940	13.5
SFFBL0400	4	9.00	BLIND	7.50	0.750	8	0.940	15.5
SFFBL0500	5	10.00	BLIND	8.50	0.875	8	0.940	19.5
SFFBL0600	6	11.00	BLIND	9.50	0.875	8	1.000	25.5
SFFBL0800	8	13.50	BLIND	11.75	0.875	8	1.130	44.5
SFFBL1000	10	16.00	BLIND	14.25	1.000	12	1.190	67.0
SFFBL1200	12	19.00	BLIND	17.00	1.000	12	1.250	98.0
SFFBL1400	14	21.00	BLIND	18.75	1.125	12	1.380	134.0
SFFBL1600	16	23.50	BLIND	21.25	1.125	16	1.440	176.0
SFFBL1800	18	25.00	BLIND	22.75	1.250	16	1.563	215.0
SFFBL2000	20	27.50	BLIND	25.00	1.250	20	1.690	286.0
SFFBL2200	22	29.50	BLIND	27.25	1.375	20	1.840	358.0
SFFBL2400	24	32.00	BLIND	29.50	1.375	20	1.880	426.0

Notes:

a. Dimensions and Tolerances per ASME/ANSI B16.5 Class 150.

b. ASTM A182 or ASTM A240 in dual Grades 304/304L or 316/316L stainless steel.

ALL DIMENSIONS ARE IN INCHES UNLESS OTHERWISE STATED.

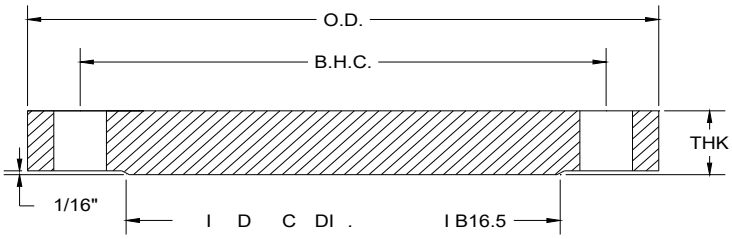



ANSI/ASME B16.5 Class 150
Stainless Steel Raised Face Blind Flanges

API Part Number	Size	O.D.	I.D.	Ø B.H.C.	Ø B.H.	# B.H.	THK	RF DIA	Weight Lbs
SRFB0050	0.5	3.50	BLIND	2.38	0.630	4	0.440	1.375	3.0
SRFB0075	0.75	3.88	BLIND	2.75	0.630	4	0.500	1.688	4.0
SRFB0100	1	4.25	BLIND	3.13	0.630	4	0.563	2.000	4.5
SRFB0125	1.25	4.63	BLIND	3.50	0.630	4	0.630	2.500	5.0
SRFB0150	1.5	5.00	BLIND	3.88	0.630	4	0.690	2.875	5.5
SRFB0200	2	6.00	BLIND	4.75	0.750	4	0.750	3.625	6.0
SRFB0250	2.5	7.00	BLIND	5.50	0.750	4	0.880	4.125	9.0
SRFB0300	3	7.50	BLIND	6.00	0.750	4	0.940	5.000	11.5
SRFB0350	3.5	8.50	BLIND	7.00	0.750	8	0.940	5.500	13.5
SRFB0400	4	9.00	BLIND	7.50	0.750	8	0.940	6.188	15.5
SRFB0500	5	10.00	BLIND	8.50	0.875	8	0.940	7.313	19.5
SRFB0600	6	11.00	BLIND	9.50	0.875	8	1.000	8.500	25.5
SRFB0800	8	13.50	BLIND	11.75	0.875	8	1.130	10.625	44.5
SRFB1000	10	16.00	BLIND	14.25	1.000	12	1.190	12.750	67.0
SRFB1200	12	19.00	BLIND	17.00	1.000	12	1.250	15.000	98.0
SRFB1400	14	21.00	BLIND	18.75	1.125	12	1.380	16.250	134.0
SRFB1600	16	23.50	BLIND	21.25	1.125	16	1.440	18.500	176.0
SRFB1800	18	25.00	BLIND	22.75	1.250	16	1.563	21.000	215.0
SRFB2000	20	27.50	BLIND	25.00	1.250	20	1.690	23.000	286.0
SRFB2200	22	29.50	BLIND	27.25	1.375	20	1.840	25.250	358.0
SRFB2400	24	32.00	BLIND	29.50	1.375	20	1.880	27.250	426.0

Notes:

a. Dimensions and Tolerances per ASME/ANSI B16.5 Class 150.

b. ASTM A182 or ASTM A240 in dual Grades 304/304L or 316/316L stainless steel.

ALL DIMENSIONS ARE IN INCHES UNLESS OTHERWISE STATED.

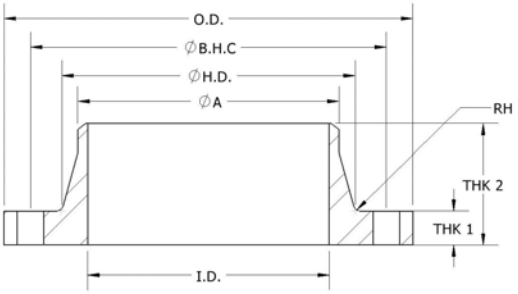



ANSI/ASME B16.5 Class 150
Forged Steel Flat Face Weld-Neck Flanges

API Part Number	Size	O.D.	I.D.	Ø B.H.C	Ø B.H	#B.H	THK1	THK2	Ø H.D.	Ø A (Weld Point)	Weight Lbs
FFWN0050-S40	0.5	3.50	0.62	2.38	0.63	4	0.44	1.81	1.19	0.84	1.2
FFWN0075-S40	0.75	3.88	0.82	2.75	0.63	4	0.50	2.00	1.50	1.05	1.7
FFWN0100-S40	1	4.25	1.05	3.13	0.63	4	0.56	2.12	1.32	1.32	2.4
FFWN0125-S40	1.25	4.63	1.38	3.50	0.63	4	0.63	2.19	1.66	1.66	3.0
FFWN0150-S40	1.5	5.00	1.61	3.88	0.63	4	0.69	2.38	1.90	1.90	3.9
FFWN0200-S40	2	6.00	2.07	4.75	0.75	4	0.75	2.44	2.38	2.38	5.9
FFWN0250-S40	2.5	7.00	2.47	5.50	0.75	4	0.88	2.69	2.88	2.88	9.3
FFWN0300-S40	3	7.50	3.07	6.00	0.75	4	0.94	2.69	3.50	3.50	11.1
FFWN0350-S40	3.5	8.50	3.55	7.00	0.75	8	0.94	2.75	4.00	4.00	13.7
FFWN0400-S40	4	9.00	4.03	7.50	0.75	8	0.94	2.94	4.50	4.50	15.4
FFWN0500-S40	5	10.00	5.05	8.50	0.88	8	0.94	3.44	5.56	5.56	19.1
FFWN0600-S40	6	11.00	6.07	9.50	0.88	8	1.00	3.44	6.63	6.63	23.4
FFWN0800-S40	8	13.50	7.98	11.75	0.88	8	1.13	3.94	8.63	8.63	38.3
FFWN1000-S40	10	16.00	10.02	14.25	1.00	12	1.19	3.94	10.75	10.75	52.3
FFWN1200-S40	12	19.00	11.94	17.00	1.00	12	1.25	4.44	12.75	12.75	80.7
FFWN1400-S40	14	21.00	13.12	18.75	1.13	12	1.38	4.94	14.00	14.00	108.1
FFWN1600-S40	16	23.50	15.00	21.25	1.13	16	1.44	4.94	16.00	16.00	137.4
FFWN1800-S40	18	25.00	16.88	22.75	1.25	16	1.56	5.44	18.00	18.00	160.7
FFWN2000-S40	20	27.50	18.81	25.00	1.25	20	1.69	5.62	20.00	20.00	199.6
FFWN2200-STD	22	29.50	21.25	27.25	1.38	20	1.75	5.82	24.00	22.00	204.7
FFWN2400-S40	24	32.00	22.62	29.50	1.38	20	1.88	5.94	26.12	24.00	281.8

Notes:

a. Dimensions and Tolerances per ASME B16.5 (½" to 24").
b. Meets ANSI/ASME Class 150 bolt pattern.
c. Material meets ASTM A105 Forged Steel requirements.
d. Weld Neck Flanges listed above are for Schedule 40 Pipe (excluding 22"-STD).
e. Weld Neck Flanges from NPS 1/2" to 10" also correspond to Standard Schedule Pipe (STD).
f. Weld Neck Flanges for other Pipe Schedules are available upon request.
g. Flanges are painted black.
h. ALL DIMENSIONS ARE IN INCHES UNLESS OTHERWISE STATED.

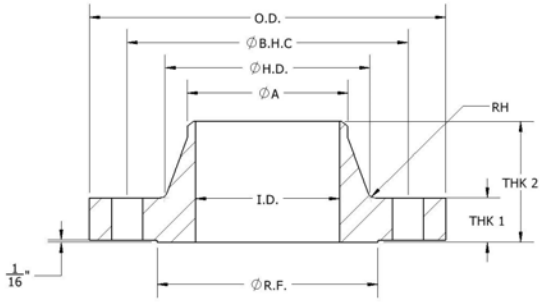



ANSI/ASME B16.5 Class 150
Forged Steel Raised Face Weld-Neck Flanges

API Part Number	Size	O.D.	I.D.	Ø B.H.C	Ø B.H	#B.H	THK1	THK2	Ø H.D.	Ø A (Weld Point)	Ø RF	RH (RAD)	Weight Lbs
RFWN0050-S40	0.5	3.50	0.62	2.38	0.63	4	0.44	1.81	1.19	0.84	1.38	0.188	1.1
RFWN0075-S40	0.75	3.88	0.82	2.75	0.63	4	0.50	2.00	1.50	1.05	1.69	0.188	1.5
RFWN0100-S40	1	4.25	1.05	3.13	0.63	4	0.56	2.12	1.32	1.32	2.00	0.188	2.2
RFWN0125-S40	1.25	4.63	1.38	3.50	0.63	4	0.63	2.19	1.66	1.66	2.50	0.188	2.9
RFWN0150-S40	1.5	5.00	1.61	3.88	0.63	4	0.69	2.38	1.90	1.90	2.88	0.188	3.7
RFWN0200-S40	2	6.00	2.07	4.75	0.75	4	0.75	2.44	2.38	2.38	3.63	0.188	5.6
RFWN0250-S40	2.5	7.00	2.47	5.50	0.75	4	0.88	2.69	2.88	2.88	4.13	0.188	8.9
RFWN0300-S40	3	7.50	3.07	6.00	0.75	4	0.94	2.69	3.50	3.50	5.00	0.188	10.7
RFWN0350-S40	3.5	8.50	3.55	7.00	0.75	8	0.94	2.75	4.00	4.00	5.50	0.188	13.2
RFWN0400-S40	4	9.00	4.03	7.50	0.75	8	0.94	2.94	4.50	4.50	6.19	0.188	14.9
RFWN0500-S40	5	10.00	5.05	8.50	0.88	8	0.94	3.44	5.56	5.56	7.31	0.188	18.5
RFWN0600-S40	6	11.00	6.07	9.50	0.88	8	1.00	3.44	6.63	6.63	8.50	0.250	22.8
RFWN0800-S40	8	13.50	7.98	11.75	0.88	8	1.13	3.94	8.63	8.63	10.63	0.250	37.5
RFWN1000-S40	10	16.00	10.02	14.25	1.00	12	1.19	3.94	10.75	10.75	12.75	0.250	51.1
RFWN1200-S40	12	19.00	11.94	17.00	1.00	12	1.25	4.44	12.75	12.75	15.00	0.313	78.9
RFWN1400-S40	14	21.00	13.12	18.75	1.13	12	1.38	4.94	14.00	14.00	16.25	0.313	105.9
RFWN1600-S40	16	23.50	15.00	21.25	1.13	16	1.44	4.94	16.00	16.00	18.50	0.313	134.8
RFWN1800-S40	18	25.00	16.88	22.75	1.25	16	1.56	5.44	18.00	18.00	21.00	0.313	158.5
RFWN2000-S40	20	27.50	18.81	25.00	1.25	20	1.69	5.62	20.00	20.00	23.00	0.313	196.9
RFWN2200-STD	22	29.50	21.25	27.25	1.38	20	1.75	5.82	24.00	22.00	25.25	0.313	202.0
RFWN2400-S40	24	32.00	22.62	29.50	1.38	20	1.88	5.94	26.12	24.00	27.25	0.313	278.4

Notes:

a. Dimensions and Tolerances per ASME B16.5 (½" to 24").
b. Meets ANSI/ASME Class 150 bolt pattern.
c. Material meets ASTM A105 Forged Steel requirements.
d. Weld neck flanges listed above are for Schedule 40 Pipe (excluding 22"-STD).
e. Weld neck flanges from NPS 1/2" to 10" also correspond to Standard Schedule Pipe (STD).
f. Weld Neck Flanges for other Pipe Schedules are available upon request.
g. Flanges are painted black.
h. ALL DIMENSIONS ARE IN INCHES UNLESS OTHERWISE STATED.

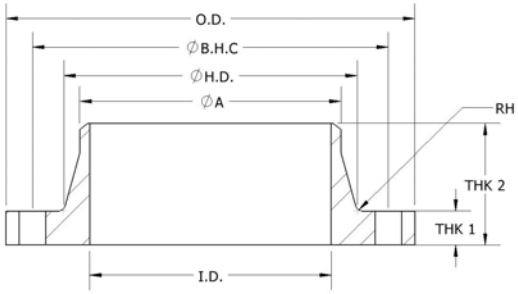



ANSI/ASME B16.5 Class 150
Forged Stainless Steel Flat Face Weld-Neck Flanges

API Part Number	Size	O.D.	I.D.	Ø B.H.C	Ø B.H	#B.H	THK1	THK2	Ø H.D.	Ø A (Weld Point)	Weight Lbs
SFFWN0050-S40	0.5	3.50	0.62	2.38	0.63	4	0.44	1.81	1.19	0.84	1.2
SFFWN0075-S40	0.75	3.88	0.82	2.75	0.63	4	0.50	2.00	1.50	1.05	1.7
SFFWN0100-S40	1	4.25	1.05	3.13	0.63	4	0.56	2.12	1.32	1.32	2.4
SFFWN0125-S40	1.25	4.63	1.38	3.50	0.63	4	0.63	2.19	1.66	1.66	3.1
SFFWN0150-S40	1.5	5.00	1.61	3.88	0.63	4	0.69	2.38	1.90	1.90	4.0
SFFWN0200-S40	2	6.00	2.07	4.75	0.75	4	0.75	2.44	2.38	2.38	6.0
SFFWN0250-S40	2.5	7.00	2.47	5.50	0.75	4	0.88	2.69	2.88	2.88	9.5
SFFWN0300-S40	3	7.50	3.07	6.00	0.75	4	0.94	2.69	3.50	3.50	11.3
SFFWN0350-S40	3.5	8.50	3.55	7.00	0.75	8	0.94	2.75	4.00	4.00	14.0
SFFWN0400-S40	4	9.00	4.03	7.50	0.75	8	0.94	2.94	4.50	4.50	15.8
SFFWN0500-S40	5	10.00	5.05	8.50	0.88	8	0.94	3.44	5.56	5.56	19.5
SFFWN0600-S40	6	11.00	6.07	9.50	0.88	8	1.00	3.44	6.63	6.63	23.9
SFFWN0800-S40	8	13.50	7.98	11.75	0.88	8	1.13	3.94	8.63	8.63	39.2
SFFWN1000-S40	10	16.00	10.02	14.25	1.00	12	1.19	3.94	10.75	10.75	53.4
SFFWN1200-S40	12	19.00	11.94	17.00	1.00	12	1.25	4.44	12.75	12.75	82.5
SFFWN1400-S40	14	21.00	13.12	18.75	1.13	12	1.38	4.94	14.00	14.00	110.6
SFFWN1600-S40	16	23.50	15.00	21.25	1.13	16	1.44	4.94	16.00	16.00	140.5
SFFWN1800-S40	18	25.00	16.88	22.75	1.25	16	1.56	5.44	18.00	18.00	164.3
SFFWN2000-S40	20	27.50	18.81	25.00	1.25	20	1.69	5.62	20.00	20.00	204.1
SFFWN2200-STD	22	29.50	21.25	27.25	1.38	20	1.75	5.82	24.00	22.00	209.3
SFFWN2400-S40	24	32.00	22.62	29.50	1.38	20	1.88	5.94	26.12	24.00	288.2

Notes:

a. Dimensions and Tolerances per ASME B16.5 (½" to 24").
b. Meets ANSI/ASME Class 150 bolt pattern.
c. Material meets ASTM A182 Forged Steel requirements.
d. Weld Neck Flanges listed above are for Schedule 40 Pipe (excluding 22"-STD).
e. Weld Neck Flanges from NPS 1/2" to 10" also correspond to Standard Schedule Pipe (STD).
f. Weld Neck Flanges for other Pipe Schedules are available upon request.
g. ALL DIMENSIONS ARE IN INCHES UNLESS OTHERWISE STATED.

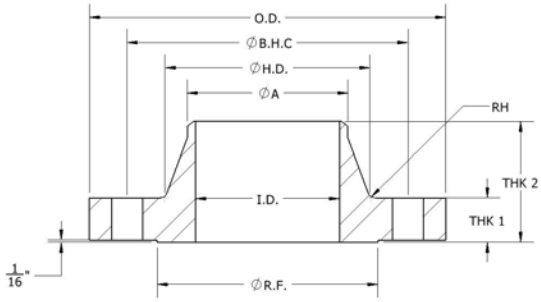



ANSI/ASME B16.5 Class 150
Forged Stainless Steel Raised Face Weld-Neck Flanges

API Part Number	Size	O.D.	I.D.	Ø B.H.C	Ø B.H	#B.H	THK1	THK2	Ø H.D.	Ø A (Weld Point)	Ø RF	RH (RAD)	Weight Lbs
SRFWN0050-S40	0.5	3.50	0.62	2.38	0.63	4	0.44	1.81	1.19	0.84	1.38	0.188	1.1
SRFWN0075-S40	0.75	3.88	0.82	2.75	0.63	4	0.50	2.00	1.50	1.05	1.69	0.188	1.6
SRFWN0100-S40	1	4.25	1.05	3.13	0.63	4	0.56	2.12	1.32	1.32	2.00	0.188	2.2
SRFWN0125-S40	1.25	4.63	1.38	3.50	0.63	4	0.63	2.19	1.66	1.66	2.50	0.188	2.9
SRFWN0150-S40	1.5	5.00	1.61	3.88	0.63	4	0.69	2.38	1.90	1.90	2.88	0.188	3.7
SRFWN0200-S40	2	6.00	2.07	4.75	0.75	4	0.75	2.44	2.38	2.38	3.63	0.188	5.7
SRFWN0250-S40	2.5	7.00	2.47	5.50	0.75	4	0.88	2.69	2.88	2.88	4.13	0.188	9.1
SRFWN0300-S40	3	7.50	3.07	6.00	0.75	4	0.94	2.69	3.50	3.50	5.00	0.188	10.9
SRFWN0350-S40	3.5	8.50	3.55	7.00	0.75	8	0.94	2.75	4.00	4.00	5.50	0.188	13.5
SRFWN0400-S40	4	9.00	4.03	7.50	0.75	8	0.94	2.94	4.50	4.50	6.19	0.188	15.2
SRFWN0500-S40	5	10.00	5.05	8.50	0.88	8	0.94	3.44	5.56	5.56	7.31	0.188	18.9
SRFWN0600-S40	6	11.00	6.07	9.50	0.88	8	1.00	3.44	6.63	6.63	8.50	0.250	23.3
SRFWN0800-S40	8	13.50	7.98	11.75	0.88	8	1.13	3.94	8.63	8.63	10.63	0.250	38.3
SRFWN1000-S40	10	16.00	10.02	14.25	1.00	12	1.19	3.94	10.75	10.75	12.75	0.250	52.3
SRFWN1200-S40	12	19.00	11.94	17.00	1.00	12	1.25	4.44	12.75	12.75	15.00	0.313	80.7
SRFWN1400-S40	14	21.00	13.12	18.75	1.13	12	1.38	4.94	14.00	14.00	16.25	0.313	108.3
SRFWN1600-S40	16	23.50	15.00	21.25	1.13	16	1.44	4.94	16.00	16.00	18.50	0.313	137.8
SRFWN1800-S40	18	25.00	16.88	22.75	1.25	16	1.56	5.44	18.00	18.00	21.00	0.313	162.1
SRFWN2000-S40	20	27.50	18.81	25.00	1.25	20	1.69	5.62	20.00	20.00	23.00	0.313	201.4
SRFWN2200-STD	22	29.50	21.25	27.25	1.38	20	1.75	5.82	24.00	22.00	25.25	0.313	206.5
SRFWN2400-S40	24	32.00	22.62	29.50	1.38	20	1.88	5.94	26.12	24.00	27.25	0.313	284.7

Notes:

a. Dimensions and Tolerances per ASME B16.5 (½" to 24").
b. Meets ANSI/ASME Class 150 bolt pattern.
c. Material meets ASTM A182 Forged Steel requirements.
d. Weld neck flanges listed above are for Schedule 40 Pipe (excluding 22"-STD).
e. Weld neck flanges from NPS 1/2" to 10" also correspond to Standard Schedule Pipe (STD).
f. Weld Neck Flanges for other Pipe Schedules are available upon request.
g. ALL DIMENSIONS ARE IN INCHES UNLESS OTHERWISE STATED.

Notes

ANSI/ASME B16.5
Class 300#
Flanges

Domestic (AIS) & Import








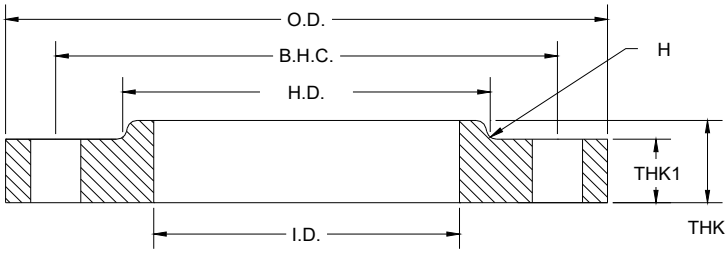



ANSI/ASME B16.5 Class 300
Forged Steel Flat Face Slip-on Flanges

API Part Number	Size	O.D.	I.D.	Ø B.H.C.	Ø B.H.	# B.H.	THK1	THK2	H.D.	Weight Lbs
FFS0050-30	0.5	3.75	0.88	2.63	0.750	4	0.563	0.880	1.500	2.0
FFS0075-30	0.75	4.63	1.09	3.25	0.750	4	0.625	1.000	1.875	2.4
FFS0100-30	1	4.88	1.36	3.50	0.750	4	0.688	1.063	2.125	3.0
FFS0125-30	1.25	5.25	1.70	3.88	0.750	4	0.750	1.063	2.500	4.5
FFS0150-30	1.5	6.13	1.95	4.50	0.875	4	0.813	1.188	2.750	6.5
FFS0200-30	2	6.50	2.44	5.00	0.750	8	0.875	1.313	3.313	7.0
FFS0250-30	2.50	7.50	2.94	5.88	0.875	8	1.000	1.500	3.938	10.0
FFS0300-30	3	8.25	3.57	6.63	0.875	8	1.125	1.688	4.625	13.0
FFS0350-30	3.5	9.00	3.57	7.25	0.875	8	1.188	1.750	5.250	17.0
FFS0400-30	4	10.00	4.57	7.88	0.875	8	1.250	1.875	5.750	23.5
FFS0500-30	5	11.00	5.66	9.25	0.875	8	1.375	2.000	7.000	29.0
FFS0600-30	6	12.50	6.72	10.63	0.875	12	1.438	2.063	8.125	36.0
FFS0800-30	8	15.00	8.72	13.00	1.000	12	1.625	2.438	10.250	56.0
FFS1000-30	10	17.50	10.88	15.25	1.125	16	1.875	2.625	12.625	77.0
FFS1200-30	12	20.50	12.88	17.75	1.250	16	2.000	2.875	14.750	113.0
FFS1400-30	14	23.00	14.14	20.25	1.250	20	2.125	3.000	16.750	159.0
FFS1600-30	16	25.50	16.16	22.50	1.375	20	2.250	3.250	19.000	210.0
FFS1800-30	18	28.00	18.18	24.75	1.375	24	2.375	3.500	21.000	253.0
FFS2000-30	20	30.50	20.20	27.00	1.375	24	2.500	3.750	23.125	307.0
FFS2400-30	24	36.00	24.25	32.00	1.625	24	2.750	4.188	27.625	490.0

Notes:

a. Dimensions and Tolerances per ASME/ANSI B16.5 Class 300.

b. Material meets ASTM A105 Forged Steel requirements.

c. Flanges are painted black.

ALL DIMENSIONS ARE IN INCHES UNLESS OTHERWISE STATED.

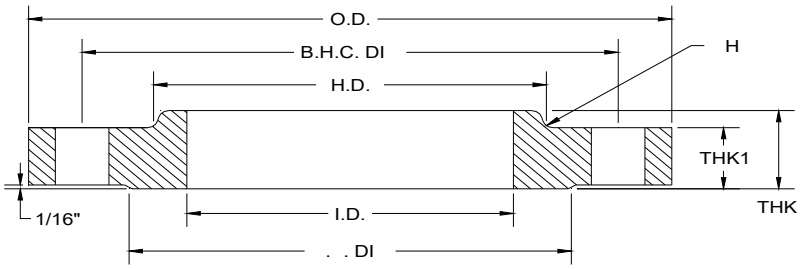



ANSI/ASME B16.5 Class 300
Forged Steel Raised Face Slip-on Flanges

API Part Number	Size	O.D.	I.D.	Ø B.H.C.	Ø B.H.	# B.H.	THK1	THK2	H.D.	RF DIA	RH (RAD)	Weight Lbs
RFS0050-30	0.5	3.75	0.88	2.63	0.750	4	0.563	0.880	1.500	1.375	0.188	2.0
RFS0075-30	0.75	4.63	1.09	3.25	0.750	4	0.625	1.000	1.875	1.688	0.188	2.4
RFS0100-30	1	4.88	1.36	3.50	0.750	4	0.688	1.063	2.125	2.000	0.188	3.0
RFS0125-30	1.25	5.25	1.70	3.88	0.750	4	0.750	1.063	2.500	2.500	0.188	4.5
RFS0150-30	1.5	6.13	1.95	4.50	0.875	4	0.813	1.188	2.750	2.875	0.188	6.5
RFS0200-30	2	6.50	2.44	5.00	0.750	8	0.875	1.313	3.313	3.625	0.188	7.0
RFS0250-30	2.50	7.50	2.94	5.88	0.875	8	1.000	1.500	3.938	4.125	0.188	10.0
RFS0300-30	3	8.25	3.57	6.63	0.875	8	1.125	1.688	4.625	5.000	0.188	13.0
RFS0350-30	3.5	9.00	3.57	7.25	0.875	8	1.188	1.750	5.250	5.500	0.188	17.0
RFS0400-30	4	10.00	4.57	7.88	0.875	8	1.250	1.875	5.750	6.188	0.188	23.5
RFS0500-30	5	11.00	5.66	9.25	0.875	8	1.375	2.000	7.000	7.313	0.188	29.0
RFS0600-30	6	12.50	6.72	10.63	0.875	12	1.438	2.063	8.125	8.500	0.250	36.0
RFS0800-30	8	15.00	8.72	13.00	1.000	12	1.625	2.438	10.250	10.625	0.250	56.0
RFS1000-30	10	17.50	10.88	15.25	1.125	16	1.875	2.625	12.625	12.750	0.250	77.0
RFS1200-30	12	20.50	12.88	17.75	1.250	16	2.000	2.875	14.750	15.000	0.313	113.0
RFS1400-30	14	23.00	14.14	20.25	1.250	20	2.125	3.000	16.750	16.250	0.313	159.0
RFS1600-30	16	25.50	16.16	22.50	1.375	20	2.250	3.250	19.000	18.500	0.313	210.0
RFS1800-30	18	28.00	18.18	24.75	1.375	24	2.375	3.500	21.000	21.000	0.313	253.0
RFS2000-30	20	30.50	20.20	27.00	1.375	24	2.500	3.750	23.125	23.000	0.313	307.0
RFS2400-30	24	36.00	24.25	32.00	1.625	24	2.750	4.188	27.625	27.250	0.313	490.0

Notes:

a. Dimensions and Tolerances per ASME/ANSI B16.5 Class 300.

b. Material meets ASTM A105 Forged Steel requirements.

c. Flanges are painted black.

ALL DIMENSIONS ARE IN INCHES UNLESS OTHERWISE STATED.

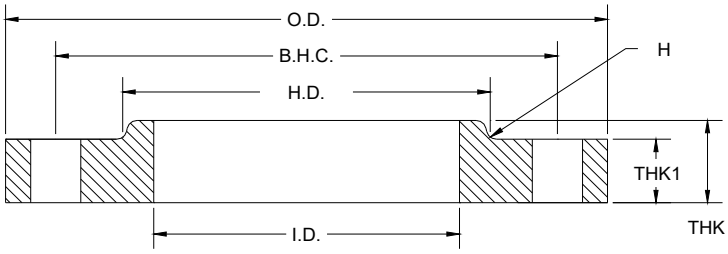



ANSI/ASME B16.5 Class 300
Forged Stainless Steel Flat Face Slip-on Flanges

API Part Number	Size	O.D.	I.D.	ØB.H.C.	ØB.H.	# B.H.	THK1	THK2	H.D.	Weight Lbs
SFFS0050-30	0.5	3.75	0.88	2.63	0.750	4	0.563	0.880	1.500	1.0
SFFS0075-30	0.75	4.63	1.09	3.25	0.750	4	0.625	1.000	1.875	2.0
SFFS0100-30	1	4.88	1.36	3.50	0.750	4	0.688	1.063	2.125	3.0
SFFS0125-30	1.25	5.25	1.70	3.88	0.750	4	0.750	1.063	2.500	3.5
SFFS0150-30	1.5	6.13	1.95	4.50	0.875	4	0.813	1.188	2.750	5.5
SFFS0200-30	2	6.50	2.44	5.00	0.750	8	0.875	1.313	3.313	6.5
SFFS0250-30	2.5	7.50	2.94	5.88	0.875	8	1.000	1.500	3.938	10.0
SFFS0300-30	3	8.25	3.57	6.63	0.875	8	1.125	1.688	4.625	13.0
SFFS0350-30	3.5	9.00	3.57	7.25	0.875	8	1.188	1.750	5.250	17.0
SFFS0400-30	4	10.00	4.57	7.88	0.875	8	1.250	1.875	5.750	21.0
SFFS0500-30	5	11.00	5.66	9.25	0.875	8	1.375	2.000	7.000	28.0
SFFS0600-30	6	12.50	6.72	10.63	0.875	12	1.438	2.063	8.125	35.0
SFFS0800-30	8	15.00	8.72	13.00	1.000	12	1.625	2.438	10.250	55.0
SFFS1000-30	10	17.50	10.88	15.25	1.125	16	1.875	2.625	12.625	79.0
SFFS1200-30	12	20.50	12.88	17.75	1.250	16	2.000	2.875	14.750	113.0
SFFS1400-30	14	23.00	14.14	20.25	1.250	20	2.125	3.000	16.750	158.0
SFFS1600-30	16	25.50	16.16	22.50	1.375	20	2.250	3.250	19.000	204.0
SFFS1800-30	18	28.00	18.18	24.75	1.375	24	2.375	3.500	21.000	230.0
SFFS2000-30	20	30.50	20.20	27.00	1.375	24	2.500	3.750	23.125	280.0
SFFS2400-30	24	36.00	24.25	32.00	1.625	24	2.750	4.188	27.625	396.0

Notes:

a. Dimensions and Tolerances per ASME/ANSI B16.5 Class 300.

b. Material meets ASTM A182 Forged Steel requirements.

c. All Stainless Steel flanges available in Dual Grade 304/304L or 316/316L.

ALL DIMENSIONS ARE IN INCHES UNLESS OTHERWISE STATED.

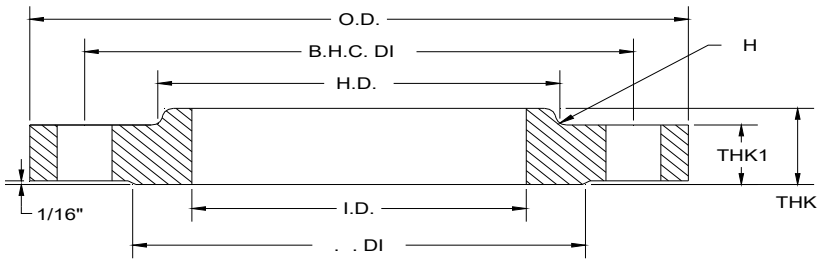



ANSI/ASME B16.5 Class 300
Forged Stainless Steel Raised Face Slip-on Flanges

API Part Number	Size	O.D.	I.D.	Ø B.H.C.	Ø B.H.	# B.H.	THK1	THK2	H.D.	RF DIA	RH (RAD)	Weight Lbs
SRFS0050-30	0.5	3.75	0.88	2.63	0.750	4	0.563	0.880	1.500	1.375	0.188	1.0
SRFS0075-30	0.75	4.63	1.09	3.25	0.750	4	0.625	1.000	1.875	1.688	0.188	2.0
SRFS0100-30	1	4.88	1.36	3.50	0.750	4	0.688	1.063	2.125	2.000	0.188	3.0
SRFS0125-30	1.25	5.25	1.70	3.88	0.750	4	0.750	1.063	2.500	2.500	0.188	3.5
SRFS0150-30	1.5	6.13	1.95	4.50	0.875	4	0.813	1.188	2.750	2.875	0.188	5.5
SRFS0200-30	2	6.50	2.44	5.00	0.750	8	0.875	1.313	3.313	3.625	0.188	6.5
SRFS0250-30	2.5	7.50	2.94	5.88	0.875	8	1.000	1.500	3.938	4.125	0.188	10.0
SRFS0300-30	3	8.25	3.57	6.63	0.875	8	1.125	1.688	4.625	5.000	0.188	13.0
SRFS0350-30	3.5	9.00	3.57	7.25	0.875	8	1.188	1.750	5.250	5.500	0.188	17.0
SRFS0400-30	4	10.00	4.57	7.88	0.875	8	1.250	1.875	5.750	6.188	0.188	21.0
SRFS0500-30	5	11.00	5.66	9.25	0.875	8	1.375	2.000	7.000	7.313	0.188	28.0
SRFS0600-30	6	12.50	6.72	10.63	0.875	12	1.438	2.063	8.125	8.500	0.250	35.0
SRFS0800-30	8	15.00	8.72	13.00	1.000	12	1.625	2.438	10.250	10.625	0.250	55.0
SRFS1000-30	10	17.50	10.88	15.25	1.125	16	1.875	2.625	12.625	12.750	0.250	79.0
SRFS1200-30	12	20.50	12.88	17.75	1.250	16	2.000	2.875	14.750	15.000	0.313	113.0
SRFS1400-30	14	23.00	14.14	20.25	1.250	20	2.125	3.000	16.750	16.250	0.313	158.0
SRFS1600-30	16	25.50	16.16	22.50	1.375	20	2.250	3.250	19.000	18.500	0.313	204.0
SRFS1800-30	18	28.00	18.18	24.75	1.375	24	2.375	3.500	21.000	21.000	0.313	230.0
SRFS2000-30	20	30.50	20.20	27.00	1.375	24	2.500	3.750	23.125	23.000	0.313	280.0
SRFS2400-30	24	36.00	24.25	32.00	1.625	24	2.750	4.188	27.625	27.250	0.313	396.0

Notes:

a. Dimensions and Tolerances per ASME/ANSI B16.5 Class 300.

b. Material meets ASTM A182 Forged Steel requirements.

c. All Stainless Steel flanges available in Dual Grade 304/304L or 316/316L.

ALL DIMENSIONS ARE IN INCHES UNLESS OTHERWISE STATED.

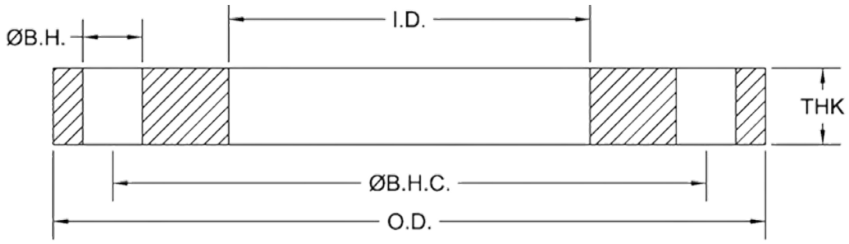



ANSI/ASME B16.5 Class 300
Steel Flat Face Blind Flanges

API Part Number	Size	O.D.	I.D.	Ø B.H.C.	Ø B.H.	# B.H.	THK	Weight Lbs
FFBL0050-30	0.5	3.75	BLIND	2.63	0.750	4	0.563	1.4
FFBL0075-30	0.75	4.63	BLIND	3.25	0.750	4	0.625	2.5
FFBL0100-30	1	4.88	BLIND	3.50	0.750	4	0.688	3.0
FFBL0125-30	1.25	5.25	BLIND	3.88	0.750	4	0.750	4.0
FFBL0150-30	1.5	6.13	BLIND	4.50	0.875	4	0.813	6.0
FFBL0200-30	2	6.50	BLIND	5.00	0.750	8	0.875	8.0
FFBL0250-30	2.50	7.50	BLIND	5.88	0.875	8	1.000	11.0
FFBL0300-30	3	8.25	BLIND	6.63	0.875	8	1.125	15.0
FFBL0350-30	3.5	9.00	BLIND	7.25	0.875	8	1.188	20.0
FFBL0400-30	4	10.00	BLIND	7.88	0.875	8	1.250	25.0
FFBL0500-30	5	11.00	BLIND	9.25	0.875	8	1.375	35.0
FFBL0600-30	6	12.50	BLIND	10.63	0.875	12	1.438	46.0
FFBL0800-30	8	15.00	BLIND	13.00	1.000	12	1.625	75.0
FFBL1000-30	10	17.50	BLIND	15.25	1.125	16	1.875	124.0
FFBL1200-30	12	20.50	BLIND	17.75	1.250	16	2.000	174.0
FFBL1400-30	14	23.00	BLIND	20.25	1.250	20	2.125	246.0
FFBL1600-30	16	25.50	BLIND	22.50	1.375	20	2.250	315.0
FFBL1800-30	18	28.00	BLIND	24.75	1.375	24	2.375	427.0
FFBL2000-30	20	30.50	BLIND	27.00	1.375	24	2.500	515.0
FFBL2400-30	24	36.00	BLIND	32.00	1.625	24	2.750	800.0

Notes:

a. Dimensions and Tolerances per ASME/ANSI B16.5 Class 300.

b. Material meets ASTM A36 or A105 Steel requirements.

c. Flanges are painted black.

ALL DIMENSIONS ARE IN INCHES UNLESS OTHERWISE STATED.

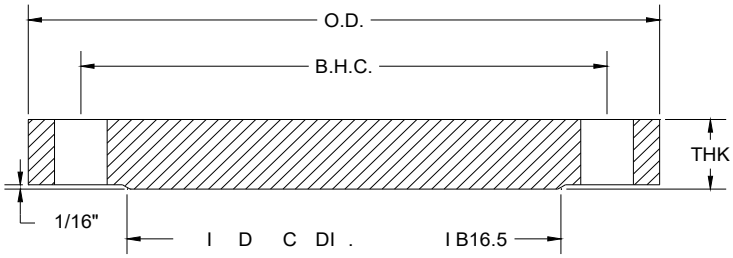



ANSI/ASME B16.5 Class 300
Steel Raised Face Blind Flanges

API Part Number	Size	O.D.	I.D.	Ø B.H.C.	Ø B.H.	# B.H.	THK	RF DIA	Weight Lbs
RFB0050-30	0.5	3.75	BLIND	2.63	0.750	4	0.563	1.375	1.4
RFB0075-30	0.75	4.63	BLIND	3.25	0.750	4	0.625	1.688	2.5
RFB0100-30	1	4.88	BLIND	3.50	0.750	4	0.688	2.000	3.0
RFB0125-30	1.25	5.25	BLIND	3.88	0.750	4	0.750	2.500	4.0
RFB0150-30	1.5	6.13	BLIND	4.50	0.875	4	0.813	2.875	6.0
RFB0200-30	2	6.50	BLIND	5.00	0.750	8	0.875	3.625	8.0
RFB0250-30	2.50	7.50	BLIND	5.88	0.875	8	1.000	4.125	11.0
RFB0300-30	3	8.25	BLIND	6.63	0.875	8	1.125	5.000	15.0
RFB0350-30	3.5	9.00	BLIND	7.25	0.875	8	1.188	5.500	20.0
RFB0400-30	4	10.00	BLIND	7.88	0.875	8	1.250	6.188	25.0
RFB0500-30	5	11.00	BLIND	9.25	0.875	8	1.375	7.313	35.0
RFB0600-30	6	12.50	BLIND	10.63	0.875	12	1.438	8.500	46.0
RFB0800-30	8	15.00	BLIND	13.00	1.000	12	1.625	10.625	75.0
RFB1000-30	10	17.50	BLIND	15.25	1.125	16	1.875	12.750	124.0
RFB1200-30	12	20.50	BLIND	17.75	1.250	16	2.000	15.000	174.0
RFB1400-30	14	23.00	BLIND	20.25	1.250	20	2.125	16.250	246.0
RFB1600-30	16	25.50	BLIND	22.50	1.375	20	2.250	18.500	315.0
RFB1800-30	18	28.00	BLIND	24.75	1.375	24	2.375	21.000	427.0
RFB2000-30	20	30.50	BLIND	27.00	1.375	24	2.500	23.000	515.0
RFB2400-30	24	36.00	BLIND	32.00	1.625	24	2.750	27.250	800.0

Notes:

a. Dimensions and Tolerances per ASME/ANSI B16.5 Class 300.

b. Material meets ASTM A36 or A105 Steel requirements.

c. Flanges are painted black.

ALL DIMENSIONS ARE IN INCHES UNLESS OTHERWISE STATED.

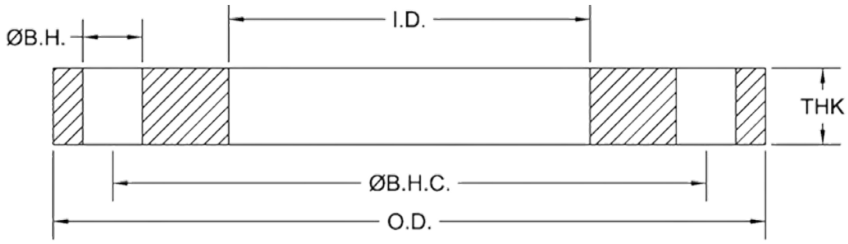

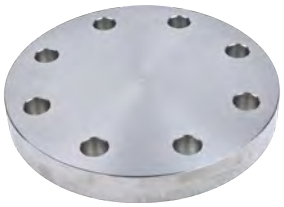

ANSI/ASME B16.5 Class 300
Stainless Steel Flat Face Blind Flanges

API Part Number	Size	O.D.	I.D.	Ø B.H.C.	Ø B.H.	# B.H.	THK	Weight Lbs
SFFBL0050-30	0.5	3.75	BLIND	2.63	0.750	4	0.563	3.0
SFFBL0075-30	0.75	4.63	BLIND	3.25	0.750	4	0.625	4.0
SFFBL0100-30	1	4.88	BLIND	3.50	0.750	4	0.688	5.0
SFFBL0125-30	1.25	5.25	BLIND	3.88	0.750	4	0.750	5.5
SFFBL0150-30	1.5	6.13	BLIND	4.50	0.875	4	0.813	6.0
SFFBL0200-30	2	6.50	BLIND	5.00	0.750	8	0.875	6.5
SFFBL0250-30	2.5	7.50	BLIND	5.88	0.875	8	1.000	10.0
SFFBL0300-30	3	8.25	BLIND	6.63	0.875	8	1.125	15.0
SFFBL0350-30	3.5	9.00	BLIND	7.25	0.875	8	1.188	21.0
SFFBL0400-30	4	10.00	BLIND	7.88	0.875	8	1.250	27.0
SFFBL0500-30	5	11.00	BLIND	9.25	0.875	8	1.375	39.0
SFFBL0600-30	6	12.50	BLIND	10.63	0.875	12	1.438	48.0
SFFBL0800-30	8	15.00	BLIND	13.00	1.000	12	1.625	75.0
SFFBL1000-30	10	17.50	BLIND	15.25	1.125	16	1.875	122.0
SFFBL1200-30	12	20.50	BLIND	17.75	1.250	16	2.000	180.0
SFFBL1400-30	14	23.00	BLIND	20.25	1.250	20	2.125	241.0
SFFBL1600-30	16	25.50	BLIND	22.50	1.375	20	2.250	312.0
SFFBL1800-30	18	28.00	BLIND	24.75	1.375	24	2.375	398.0
SFFBL2000-30	20	30.50	BLIND	27.00	1.375	24	2.500	500.0
SFFBL2400-30	24	36.00	BLIND	32.00	1.625	24	2.750	760.0

Notes:

a. Dimensions and Tolerances per ASME/ANSI B16.5 Class 300.

b. ASTM A182 or ASTM A240 in dual Grades 304/304L or 316/316L stainless steel.

ALL DIMENSIONS ARE IN INCHES UNLESS OTHERWISE STATED.

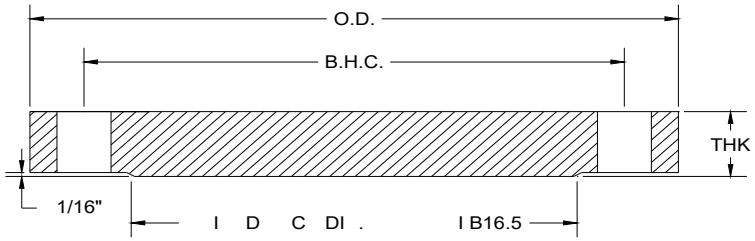

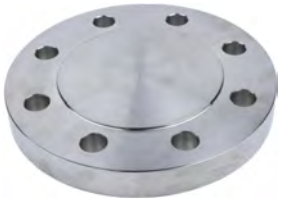

ANSI/ASME B16.5 Class 300
Stainless Steel Raised Face Blind Flanges

API Part Number	Size	O.D.	I.D.	Ø B.H.C.	Ø B.H.	# B.H.	THK	RF DIA	Weight Lbs
SRFB0050-30	0.5	3.75	BLIND	2.63	0.750	4	0.563	1.375	3.0
SRFB0075-30	0.75	4.63	BLIND	3.25	0.750	4	0.625	1.688	4.0
SRFB0100-30	1	4.88	BLIND	3.50	0.750	4	0.688	2.000	5.0
SRFB0125-30	1.25	5.25	BLIND	3.88	0.750	4	0.750	2.500	5.5
SRFB0150-30	1.5	6.13	BLIND	4.50	0.875	4	0.813	2.875	6.0
SRFB0200-30	2	6.50	BLIND	5.00	0.750	8	0.875	3.625	6.5
SRFB0250-30	2.5	7.50	BLIND	5.88	0.875	8	1.000	4.125	10.0
SRFB0300-30	3	8.25	BLIND	6.63	0.875	8	1.125	5.000	15.0
SRFB0350-30	3.5	9.00	BLIND	7.25	0.875	8	1.188	5.500	21.0
SRFB0400-30	4	10.00	BLIND	7.88	0.875	8	1.250	6.188	27.0
SRFB0500-30	5	11.00	BLIND	9.25	0.875	8	1.375	7.313	39.0
SRFB0600-30	6	12.50	BLIND	10.63	0.875	12	1.438	8.500	48.0
SRFB0800-30	8	15.00	BLIND	13.00	1.000	12	1.625	10.625	75.0
SRFB1000-30	10	17.50	BLIND	15.25	1.125	16	1.875	12.750	122.0
SRFB1200-30	12	20.50	BLIND	17.75	1.250	16	2.000	15.000	180.0
SRFB1400-30	14	23.00	BLIND	20.25	1.250	20	2.125	16.250	241.0
SRFB1600-30	16	25.50	BLIND	22.50	1.375	20	2.250	18.500	312.0
SRFB1800-30	18	28.00	BLIND	24.75	1.375	24	2.375	21.000	398.0
SRFB2000-30	20	30.50	BLIND	27.00	1.375	24	2.500	23.000	500.0
SRFB2400-30	24	36.00	BLIND	32.00	1.625	24	2.750	27.250	760.0

Notes:

a. Dimensions and Tolerances per ASME/ANSI B16.5 Class 300.

b. ASTM A182 or ASTM A240 in dual Grades 304/304L or 316/316L stainless steel.

ALL DIMENSIONS ARE IN INCHES UNLESS OTHERWISE STATED.

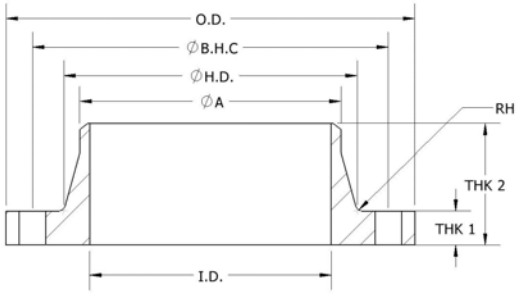



ANSI/ASME B16.5 Class 300
Forged Steel Flat Face Weld-Neck Flanges

API Part Number	Size	O.D.	I.D.	Ø B.H.C	Ø B.H	#B.H	THK1	THK2	Ø H.D.	Ø A (Weld Point)	Weight Lbs
FFWN0050-30-S40	0.5	3.75	0.62	2.63	0.750	4	0.50	2.00	1.50	0.84	1.7
FFWN0075-30-S40	0.75	4.63	0.82	3.25	0.750	4	0.56	2.19	1.88	1.05	2.9
FFWN0100-30-S40	1	4.88	1.05	3.50	0.750	4	0.62	2.38	2.12	1.32	3.6
FFWN0125-30-S40	1.25	5.25	1.38	3.88	0.750	4	0.69	2.50	2.50	1.66	4.6
FFWN0150-30-S40	1.5	6.13	1.61	4.50	0.875	4	0.75	2.63	2.75	1.90	6.6
FFWN0200-30-S40	2	6.50	2.07	5.00	0.750	4	0.81	2.69	3.31	2.38	7.6
FFWN0250-30-S40	2.5	7.50	2.47	5.88	0.875	8	0.94	2.94	3.94	2.88	11.6
FFWN0300-30-S40	3	8.25	3.07	6.63	0.875	8	1.06	3.06	4.62	3.50	15.3
FFWN0350-30-S40	3.5	9.00	3.55	7.25	0.875	8	1.12	3.13	5.25	4.00	19.1
FFWN0400-30-S40	4	10.00	4.03	7.88	0.875	8	1.19	3.32	5.75	4.50	25.0
FFWN0500-30-S40	5	11.00	5.05	9.25	0.875	8	1.31	3.82	7.00	5.56	32.8
FFWN0600-30-S40	6	12.50	6.07	10.63	0.875	12	1.38	3.82	8.12	6.63	42.1
FFWN0800-30-S40	8	15.00	7.98	13.00	1.000	12	1.56	4.32	10.25	8.63	65.0
FFWN1000-30-S40	10	17.50	10.02	15.25	1.125	16	1.81	4.56	12.62	10.75	92.5
FFWN1200-30-S40	12	20.50	11.94	17.75	1.250	16	1.94	5.06	14.75	12.75	135.2
FFWN1400-30-S40	14	23.00	13.12	20.25	1.250	20	2.06	5.56	16.75	14.00	187.4
FFWN1600-30-S40	16	25.50	15.00	22.50	1.375	20	2.19	5.69	19.00	16.00	236.8
FFWN1800-30-S40	18	28.00	16.88	24.75	1.375	24	2.31	6.19	21.00	18.00	296.8
FFWN2000-30-S40	20	30.50	18.81	27.00	1.375	24	2.44	6.32	23.12	20.00	361.6
FFWN2200-30-STD	22	33.00	21.25	29.25	1.625	24	2.56	6.44	25.25	22.00	393.4
FFWN2400-30-S40	24	36.00	22.62	32.00	1.625	24	2.69	6.56	27.62	24.00	531.3

Notes:

a. Dimensions and Tolerances per ASME B16.5 (½" to 24").
b. Meets ANSI/ASME Class 300 bolt pattern.
c. Material meets ASTM A105 Forged Steel requirements.
d. Weld neck flanges listed above are for Schedule 40 Pipe (excluding 22"-STD).
e. Weld neck flanges from NPS 1/2" to 10" also correspond to Standard Schedule Pipe (STD).
f. Weld Neck Flanges for other Pipe Schedules are available upon request.
g. Flanges are painted black.
h. ALL DIMENSIONS ARE IN INCHES UNLESS OTHERWISE STATED.

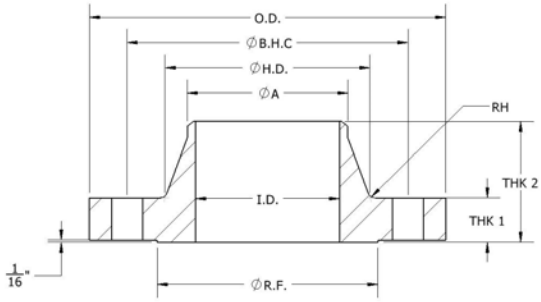



ANSI/ASME B16.5 Class 300
Forged Steel Raised Face Weld-Neck Flanges

API Part Number	Size	O.D.	I.D.	Ø B.H.C	Ø B.H	#B.H	THK1	THK2	Ø H.D.	Ø A (Weld Point)	Ø RF	RH (RAD)	Weight Lbs
RFWN0050-30-S40	0.5	3.75	0.62	2.63	0.750	4	0.50	2.00	1.50	0.84	1.38	0.188	1.5
RFWN0075-30-S40	0.75	4.63	0.82	3.25	0.750	4	0.56	2.19	1.88	1.05	1.69	0.188	2.7
RFWN0100-30-S40	1	4.88	1.05	3.50	0.750	4	0.62	2.38	2.12	1.32	2.00	0.188	3.4
RFWN0125-30-S40	1.25	5.25	1.38	3.88	0.750	4	0.69	2.50	2.50	1.66	2.50	0.188	4.4
RFWN0150-30-S40	1.5	6.13	1.61	4.50	0.875	4	0.75	2.63	2.75	1.90	2.88	0.188	6.3
RFWN0200-30-S40	2	6.50	2.07	5.00	0.750	4	0.81	2.69	3.31	2.38	3.63	0.188	7.3
RFWN0250-30-S40	2.5	7.50	2.47	5.88	0.875	8	0.94	2.94	3.94	2.88	4.13	0.188	11.1
RFWN0300-30-S40	3	8.25	3.07	6.63	0.875	8	1.06	3.06	4.62	3.50	5.00	0.188	14.8
RFWN0350-30-S40	3.5	9.00	3.55	7.25	0.875	8	1.12	3.13	5.25	4.00	5.50	0.188	18.5
RFWN0400-30-S40	4	10.00	4.03	7.88	0.875	8	1.19	3.32	5.75	4.50	6.19	0.188	24.2
RFWN0500-30-S40	5	11.00	5.05	9.25	0.875	8	1.31	3.82	7.00	5.56	7.31	0.188	31.9
RFWN0600-30-S40	6	12.50	6.07	10.63	0.875	12	1.38	3.82	8.12	6.63	8.50	0.250	41.0
RFWN0800-30-S40	8	15.00	7.98	13.00	1.000	12	1.56	4.32	10.25	8.63	10.63	0.250	63.6
RFWN1000-30-S40	10	17.50	10.02	15.25	1.125	16	1.81	4.56	12.62	10.75	12.75	0.250	90.8
RFWN1200-30-S40	12	20.50	11.94	17.75	1.250	16	1.94	5.06	14.75	12.75	15.00	0.313	132.9
RFWN1400-30-S40	14	23.00	13.12	20.25	1.250	20	2.06	5.56	16.75	14.00	16.25	0.313	184.1
RFWN1600-30-S40	16	25.50	15.00	22.50	1.375	20	2.19	5.69	19.00	16.00	18.50	0.313	233.0
RFWN1800-30-S40	18	28.00	16.88	24.75	1.375	24	2.31	6.19	21.00	18.00	21.00	0.313	292.6
RFWN2000-30-S40	20	30.50	18.81	27.00	1.375	24	2.44	6.32	23.12	20.00	23.00	0.313	356.7
RFWN2200-30-STD	22	33.00	21.25	29.25	1.625	24	2.56	6.44	25.25	22.00	25.25	0.313	388.0
RFWN2400-30-S40	24	36.00	22.62	32.00	1.625	24	2.69	6.56	27.62	24.00	27.25	0.313	524.5

Notes:

a. Dimensions and Tolerances per ASME B16.5 (½" to 24").

b. Meets ANSI/ASME Class 300 bolt pattern.

c. Material meets ASTM A105 Forged Steel requirements.

d. Weld neck flanges listed above are for Schedule 40 Pipe (excluding 22"-STD).

e. Weld neck flanges from NPS 1/2" to 10" also correspond to Standard Schedule Pipe (STD).

f. Weld Neck Flanges for other Pipe Schedules are available upon request.

g. Flanges are painted black.

h. ALL DIMENSIONS ARE IN INCHES UNLESS OTHERWISE STATED.

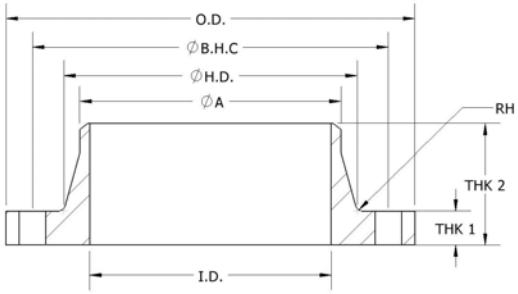



ANSI/ASME B16.5 Class 300
Forged Stainless Steel Flat Face Weld-Neck Flanges

API Part Number	Size	O.D.	I.D.	Ø B.H.C	ØB.H	#B.H	THK1	THK2	Ø H.D.	Ø A (Weld Point)	Weight Lbs
SFFWN0050-30-S40	0.5	3.75	0.62	2.63	0.750	4	0.50	2.00	1.50	0.84	1.7
SFFWN0075-30-S40	0.75	4.63	0.82	3.25	0.750	4	0.56	2.19	1.88	1.05	3.0
SFFWN0100-30-S40	1	4.88	1.05	3.50	0.750	4	0.62	2.38	2.12	1.32	3.7
SFFWN0125-30-S40	1.25	5.25	1.38	3.88	0.750	4	0.69	2.50	2.50	1.66	4.7
SFFWN0150-30-S40	1.5	6.13	1.61	4.50	0.875	4	0.75	2.63	2.75	1.90	6.8
SFFWN0200-30-S40	2	6.50	2.07	5.00	0.750	4	0.81	2.69	3.31	2.38	7.8
SFFWN0250-30-S40	2.5	7.50	2.47	5.88	0.875	8	0.94	2.94	3.94	2.88	11.9
SFFWN0300-30-S40	3	8.25	3.07	6.63	0.875	8	1.06	3.06	4.62	3.50	15.7
SFFWN0350-30-S40	3.5	9.00	3.55	7.25	0.875	8	1.12	3.13	5.25	4.00	19.6
SFFWN0400-30-S40	4	10.00	4.03	7.88	0.875	8	1.19	3.32	5.75	4.50	25.5
SFFWN0500-30-S40	5	11.00	5.05	9.25	0.875	8	1.31	3.82	7.00	5.56	33.5
SFFWN0600-30-S40	6	12.50	6.07	10.63	0.875	12	1.38	3.82	8.12	6.63	43.0
SFFWN0800-30-S40	8	15.00	7.98	13.00	1.000	12	1.56	4.32	10.25	8.63	66.4
SFFWN1000-30-S40	10	17.50	10.02	15.25	1.125	16	1.81	4.56	12.62	10.75	94.6
SFFWN1200-30-S40	12	20.50	11.94	17.75	1.250	16	1.94	5.06	14.75	12.75	138.3
SFFWN1400-30-S40	14	23.00	13.12	20.25	1.250	20	2.06	5.56	16.75	14.00	191.6
SFFWN1600-30-S40	16	25.50	15.00	22.50	1.375	20	2.19	5.69	19.00	16.00	242.1
SFFWN1800-30-S40	18	28.00	16.88	24.75	1.375	24	2.31	6.19	21.00	18.00	303.5
SFFWN2000-30-S40	20	30.50	18.81	27.00	1.375	24	2.44	6.32	23.12	20.00	369.8
SFFWN2200-30-STD	22	33.00	21.25	29.25	1.625	24	2.56	6.44	25.25	22.00	402.2
SFFWN2400-30-S40	24	36.00	22.62	32.00	1.625	24	2.69	6.56	27.62	24.00	543.3

Notes:

a. Dimensions and Tolerances per ASME B16.5 (½" to 24").
b. Meets ANSI/ASME Class 300 bolt pattern.
c. Material meets ASTM A182 Forged Steel requirements.
d. Weld neck flanges listed above are for Schedule 40 Pipe (excluding 22"-STD).
e. Weld neck flanges from NPS 1/2" to 10" also correspond to Standard Schedule Pipe (STD).
f. Weld Neck Flanges for other Pipe Schedules are available upon request.
g. ALL DIMENSIONS ARE IN INCHES UNLESS OTHERWISE STATED.

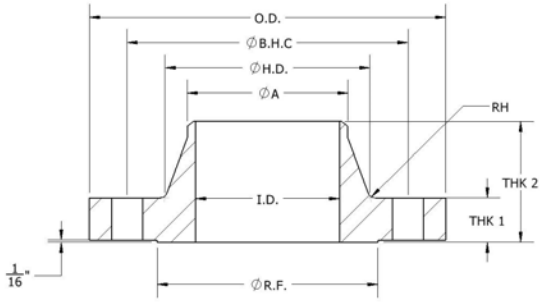



ANSI/ASME B16.5 Class 300
Forged Stainless Steel Raised Face Weld-Neck Flanges

API Part Number	Size	O.D.	I.D.	Ø B.H.C	Ø B.H	#B.H	THK1	THK2	Ø H.D.	Ø A (Weld Point)	Ø RF	RH (RAD)	Weight Lbs
SRFWN0050-30-S40	0.5	3.75	0.62	2.63	0.750	4	0.50	2.00	1.50	0.84	1.38	0.188	1.6
SRFWN0075-30-S40	0.75	4.63	0.82	3.25	0.750	4	0.56	2.19	1.88	1.05	1.69	0.188	2.8
SRFWN0100-30-S40	1	4.88	1.05	3.50	0.750	4	0.62	2.38	2.12	1.32	2.00	0.188	3.5
SRFWN0125-30-S40	1.25	5.25	1.38	3.88	0.750	4	0.69	2.50	2.50	1.66	2.50	0.188	4.5
SRFWN0150-30-S40	1.5	6.13	1.61	4.50	0.875	4	0.75	2.63	2.75	1.90	2.88	0.188	6.4
SRFWN0200-30-S40	2	6.50	2.07	5.00	0.750	4	0.81	2.69	3.31	2.38	3.63	0.188	7.5
SRFWN0250-30-S40	2.5	7.50	2.47	5.88	0.875	8	0.94	2.94	3.94	2.88	4.13	0.188	11.4
SRFWN0300-30-S40	3	8.25	3.07	6.63	0.875	8	1.06	3.06	4.62	3.50	5.00	0.188	15.2
SRFWN0350-30-S40	3.5	9.00	3.55	7.25	0.875	8	1.12	3.13	5.25	4.00	5.50	0.188	18.9
SRFWN0400-30-S40	4	10.00	4.03	7.88	0.875	8	1.19	3.32	5.75	4.50	6.19	0.188	24.8
SRFWN0500-30-S40	5	11.00	5.05	9.25	0.875	8	1.31	3.82	7.00	5.56	7.31	0.188	32.6
SRFWN0600-30-S40	6	12.50	6.07	10.63	0.875	12	1.38	3.82	8.12	6.63	8.50	0.250	42.0
SRFWN0800-30-S40	8	15.00	7.98	13.00	1.000	12	1.56	4.32	10.25	8.63	10.63	0.250	65.0
SRFWN1000-30-S40	10	17.50	10.02	15.25	1.125	16	1.81	4.56	12.62	10.75	12.75	0.250	92.9
SRFWN1200-30-S40	12	20.50	11.94	17.75	1.250	16	1.94	5.06	14.75	12.75	15.00	0.313	135.9
SRFWN1400-30-S40	14	23.00	13.12	20.25	1.250	20	2.06	5.56	16.75	14.00	16.25	0.313	188.3
SRFWN1600-30-S40	16	25.50	15.00	22.50	1.375	20	2.19	5.69	19.00	16.00	18.50	0.313	238.3
SRFWN1800-30-S40	18	28.00	16.88	24.75	1.375	24	2.31	6.19	21.00	18.00	21.00	0.313	299.2
SRFWN2000-30-S40	20	30.50	18.81	27.00	1.375	24	2.44	6.32	23.12	20.00	23.00	0.313	364.7
SRFWN2200-30-STD	22	33.00	21.25	29.25	1.625	24	2.56	6.44	25.25	22.00	25.25	0.313	396.7
SRFWN2400-30-S40	24	36.00	22.62	32.00	1.625	24	2.69	6.56	27.62	24.00	27.25	0.313	536.3

Notes:

a. Dimensions and Tolerances per ASME B16.5 (½" to 24").
b. Meets ANSI/ASME Class 300 bolt pattern.
c. Material meets ASTM A182 Forged Steel requirements.
d. Weld neck flanges listed above are for Schedule 40 Pipe (excluding 22"-STD).
e. Weld neck flanges from NPS 1/2" to 10" also correspond to Standard Schedule Pipe (STD).
f. Weld Neck Flanges for other Pipe Schedules are available upon request.
g. ALL DIMENSIONS ARE IN INCHES UNLESS OTHERWISE STATED.

Notes

API INTERNATIONAL

CleanLine

NSF-61-372 Certified

Domestic (AIS)

NSF

Certified to
NSF/ANSI/CAN 61-G & 372

INDEPENDENTLY NSF CERTIFIED®



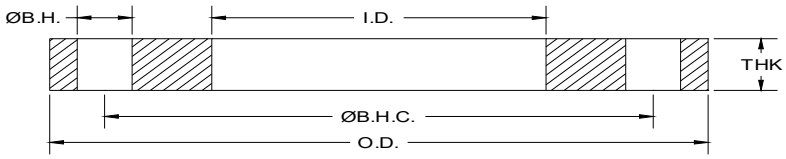



CleanLine

AWWA C228
Class "SD" Stainless Steel-Ring Flanges (NSF-61-372)
[150-175 psi]

API Part Number	Size	O.D.	I.D.	Ø B.H.C.	Ø B.H.	# B.H.	THK	Weight Lbs
SPF0200-D-CLN	2	6.00	2.44	4.75	0.750	4	0.625	4.1
SPF0250-D-CLN	2.5	7.00	2.94	5.50	0.750	4	0.625	5.4
SPF0300-D-CLN	3	7.50	3.57	6.00	0.750	4	0.625	5.9
SPF0400-D-CLN	4	9.00	4.57	7.50	0.750	8	0.625	8.1
SPF0500-D-CLN	5	10.00	5.66	8.50	0.875	8	0.625	9.1
SPF0600-D-CLN	6	11.00	6.72	9.50	0.875	8	0.688	10.7
SPF0800-D-CLN	8	13.50	8.72	11.75	0.875	8	0.688	15.7
SPF1000-D-CLN	10	16.00	10.88	14.25	1.000	12	0.688	19.3
SPF1200-D-CLN	12	19.00	12.88	17.00	1.000	12	0.812	33.9
SPF1400-D-CLN	14	21.00	14.19	18.75	1.125	12	0.938	47.3
SPF1600-D-CLN	16	23.50	16.19	21.25	1.125	16	1.000	60.8
SPF1800-D-CLN	18	25.00	18.19	22.75	1.250	16	1.062	65.2
SPF2000-D-CLN	20	27.50	20.19	25.00	1.250	20	1.125	81.2
SPF2200-D-CLN	22	29.50	22.19	27.25	1.375	20	1.188	90.8
SPF2400-D-CLN	24	32.00	24.19	29.50	1.375	20	1.250	112.0
SPF2600-D-CLN	26	34.25	26.19	31.75	1.375	24	1.312	132.0
SPF2800-D-CLN	28	36.50	28.19	34.00	1.375	28	1.312	148.0
SPF3000-D-CLN	30	38.75	30.19	36.00	1.375	28	1.375	169.0
SPF3200-D-CLN	32	41.75	32.19	38.50	1.625	28	1.500	211.0
SPF3400-D-CLN	34	43.75	34.19	40.50	1.625	32	1.500	219.0
SPF3600-D-CLN	36	46.00	36.19	42.75	1.625	32	1.625	265.0
SPF3800-D-CLN	38	48.75	38.19	45.25	1.625	32	1.625	300.0
SPF4000-D-CLN	40	50.75	40.19	47.25	1.625	36	1.625	311.0
SPF4200-D-CLN	42	53.00	42.19	49.50	1.625	36	1.750	362.0
SPF4400-D-CLN	44	55.25	44.19	51.75	1.625	40	1.750	385.0
SPF4600-D-CLN	46	57.25	46.19	53.75	1.625	40	1.750	404.0
SPF4800-D-CLN	48	59.50	48.19	56.00	1.625	44	1.875	457.0
SPF5000-D-CLN	50	61.75	50.19	58.25	1.875	44	2.000	505.0
SPF5200-D-CLN	52	64.00	52.19	60.50	1.875	44	2.000	539.0
SPF5400-D-CLN	54	66.25	54.19	62.75	1.875	44	2.125	611.0
SPF6000-D-CLN	60	73.00	60.19	69.25	1.875	52	2.250	760.0
SPF6600-D-CLN	66	80.00	66.19	76.00	1.875	52	2.500	1021.0
SPF7200-D-CLN	72	86.50	72.19	82.50	1.875	60	2.625	1203.0

Notes:

a. Dual grades 304/304L & 316/316L Stainless Steel material conforms to the requirements of AWWA C228 specifications.

b. Meets ANSI/ASME Class 150 bolt pattern.

c. Pressure Ratings: up to 175psi (4" – 12") and up to 150psi (14" and larger) at atmospheric temperature.

d. These products have been certified by NSF® against the requirements of NSF/ANSI/CAN 61 and NSF/ANSI/CAN 372.

e. ALL DIMENSIONS ARE IN INCHES UNLESS OTHERWISE STATED.

NSF
Certified to NSF/ANSI/CAN 61-G & 372

INDEPENDENTLY NSF CERTIFIED

DC# 0826

1-800-523-0852 www.apiint.com

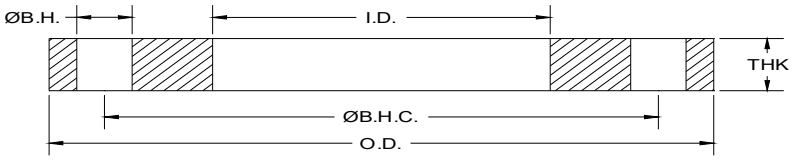



CleanLine

AWWA C228
Class "SE" Stainless Steel-Ring Flanges (NSF-61-372)
[275 psi]

API Part Number	Size	O.D.	I.D.	Ø B.H.C.	Ø B.H.	# B.H.	THK	Weight Lbs
SPF0200-E-CLN	2	6.00	2.44	4.75	0.750	4	1.125	6.9
SPF0250-E-CLN	2.5	7.00	2.94	5.50	0.750	4	1.125	9.5
SPF0300-E-CLN	3	7.50	3.57	6.00	0.750	4	1.125	10.3
SPF0400-E-CLN	4	9.00	4.57	7.50	0.750	8	1.125	14.1
SPF0500-E-CLN	5	10.00	5.66	8.50	0.875	8	1.188	16.7
SPF0600-E-CLN	6	11.00	6.72	9.50	0.875	8	1.313	21.1
SPF0800-E-CLN	8	13.50	8.72	11.75	0.875	8	1.500	34.4
SPF1000-E-CLN	10	16.00	10.88	14.25	1.000	12	1.563	45.9
SPF1200-E-CLN	12	19.00	12.88	17.00	1.000	12	1.750	72.3
SPF1400-E-CLN	14	21.00	14.19	18.75	1.125	12	1.875	97.7
SPF1600-E-CLN	16	23.50	16.19	21.25	1.125	16	2.000	123.4
SPF1800-E-CLN	18	25.00	18.19	22.75	1.250	16	2.125	130.0
SPF2000-E-CLN	20	27.50	20.19	25.00	1.250	20	2.375	171.0
SPF2200-E-CLN	22	29.50	22.19	27.25	1.375	20	2.500	189.0
SPF2400-E-CLN	24	32.00	24.19	29.50	1.375	20	2.625	234.0
SPF2600-E-CLN	26	34.25	26.19	31.75	1.375	24	2.750	270.0
SPF2800-E-CLN	28	36.50	28.19	34.00	1.375	28	2.750	296.0
SPF3000-E-CLN	30	38.75	30.19	36.00	1.375	28	2.875	350.0
SPF3200-E-CLN	32	41.75	32.19	38.50	1.625	28	3.000	396.0
SPF3400-E-CLN	34	43.75	34.19	40.50	1.625	32	3.000	440.0
SPF3600-E-CLN	36	46.00	36.19	42.75	1.625	32	3.125	511.0
SPF3800-E-CLN	38	48.75	38.19	45.25	1.625	32	3.125	579.0
SPF4000-E-CLN	40	50.75	40.19	47.25	1.625	36	3.250	625.0
SPF4200-E-CLN	42	53.00	42.19	49.50	1.625	36	3.375	689.0
SPF4400-E-CLN	44	55.25	44.19	51.75	1.625	40	3.375	746.0
SPF4600-E-CLN	46	57.25	46.19	53.75	1.625	40	3.438	799.0
SPF4800-E-CLN	48	59.50	48.19	56.00	1.625	44	3.500	857.0
SPF5000-E-CLN	50	61.75	50.19	58.25	1.875	44	3.500	886.0
SPF5200-E-CLN	52	64.00	52.19	60.50	1.875	44	3.625	992.0
SPF5400-E-CLN	54	66.25	54.19	62.75	1.875	44	3.750	1082.0
SPF6000-E-CLN	60	73.00	60.19	69.25	1.875	52	3.875	1312.0
SPF6600-E-CLN	66	80.00	66.19	76.00	1.875	52	4.250	1735.0
SPF7200-E-CLN	72	86.50	72.19	82.50	1.875	60	4.375	2004.0

Notes:

a. Dual grades 304/304L & 316/316L Stainless Steel material conforms to the requirements of AWWA C228 specifications.

b. Meets ANSI/ASME Class 150 bolt pattern.

c. Pressure Ratings: up to 275psi at atmospheric temperature.

d. These products have been certified by NSF® against the requirements of NSF/ANSI/CAN 61 and NSF/ANSI/CAN 372.

e. ALL DIMENSIONS ARE IN INCHES UNLESS OTHERWISE STATED.

NSF

Certified to NSF/ANSI/CAN 61-G & 372

INDEPENDENTLY NSF CERTIFIED®

DC# 0826

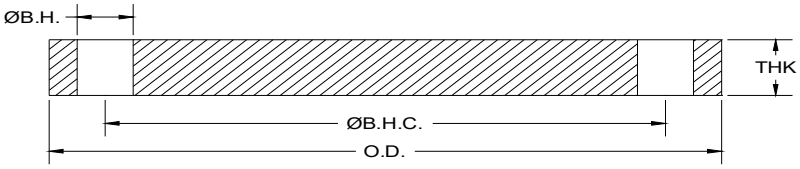



AWWA C228
Class "SD" Stainless Steel Blind Flanges (NSF-61-372) [150-175 psi]

API Part Number	Size	O.D.	I.D.	Ø B.H.C.	Ø B.H.	# B.H.	THK	Weight Lbs
SPFBL0400-D-CLN	4	9.00	BLIND	7.50	0.750	8	0.625	11.0
SPFBL0500-D-CLN	5	10.00	BLIND	8.50	0.875	8	0.650	13.1
SPFBL0600-D-CLN	6	11.00	BLIND	9.50	0.875	8	0.693	18.1
SPFBL0800-D-CLN	8	13.50	BLIND	11.75	0.875	8	0.813	31.0
SPFBL1000-D-CLN	10	16.00	BLIND	14.25	1.000	12	0.953	52.0
SPFBL1200-D-CLN	12	19.00	BLIND	17.00	1.000	12	1.117	87.0
SPFBL1400-D-CLN	14	21.00	BLIND	18.75	1.125	12	1.133	107.0
SPFBL1600-D-CLN	16	23.50	BLIND	21.25	1.125	16	1.265	150.0
SPFBL1800-D-CLN	18	25.00	BLIND	22.75	1.250	16	1.331	178.0
SPFBL2000-D-CLN	20	27.50	BLIND	25.00	1.250	20	1.448	234.0
SPFBL2200-D-CLN	22	29.50	BLIND	27.25	1.375	20	1.568	290.0
SPFBL2400-D-CLN	24	32.00	BLIND	29.50	1.375	20	1.661	365.0
SPFBL2600-D-CLN	26	34.25	BLIND	31.75	1.375	24	1.786	447.0
SPFBL2800-D-CLN	28	36.50	BLIND	34.00	1.375	28	1.906	542.0
SPFBL3000-D-CLN	30	38.75	BLIND	36.00	1.375	28	2.008	647.0
SPFBL3200-D-CLN	32	41.75	BLIND	38.50	1.625	28	2.150	798.0
SPFBL3400-D-CLN	34	43.75	BLIND	40.50	1.625	32	2.252	916.0
SPFBL3600-D-CLN	36	46.00	BLIND	42.75	1.625	32	2.370	1071.0
SPFBL3800-D-CLN	38	48.75	BLIND	45.25	1.625	32	2.506	1277.0
SPFBL4000-D-CLN	40	50.75	BLIND	47.25	1.625	36	2.609	1439.0
SPFBL4200-D-CLN	42	53.00	BLIND	49.50	1.625	36	2.729	1648.0
SPFBL4400-D-CLN	44	55.25	BLIND	51.75	1.625	40	2.849	1867.0
SPFBL4600-D-CLN	46	57.25	BLIND	53.75	1.625	40	2.952	2082.0
SPFBL4800-D-CLN	48	59.50	BLIND	56.00	1.625	44	3.072	2340.0
SPFBL5000-D-CLN	50	61.75	BLIND	58.25	1.875	44	3.196	2600.0
SPFBL5200-D-CLN	52	64.00	BLIND	60.50	1.875	44	3.315	2906.0
SPFBL5400-D-CLN	54	66.25	BLIND	62.75	1.875	44	3.435	3235.0
SPFBL6000-D-CLN	60	73.00	BLIND	69.25	1.875	52	3.779	4328.0
SPFBL6600-D-CLN	66	80.00	BLIND	76.00	1.875	52	4.136	5719.0
SPFBL7200-D-CLN	72	86.50	BLIND	82.50	1.875	60	4.480	7245.0

Notes:

a. Dual grades 304/304L & 316/316L Stainless Steel material conforms to the requirements of AWWA C228 specifications.

b. Meets ANSI/ASME Class 150 bolt pattern.

c. Pressure Ratings: up to 175psi (4" – 12") and up to 150psi (14" and larger) at atmospheric temperature.

d. These products have been certified by NSF® against the requirements of NSF/ANSI/CAN 61 and NSF/ANSI/CAN 372

e. ALL DIMENSIONS ARE IN INCHES UNLESS OTHERWISE STATED.

Certified to NSF/ANSI/CAN 61-G & 372

DC# 0826

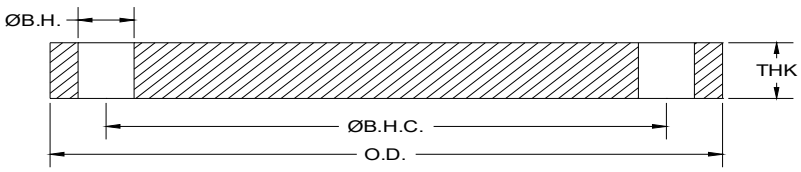



AWWA C228

Class "SE" Stainless Steel Blind Flanges (NSF-61-372) [275psi]

API Part Number	Size	O.D.	I.D.	Ø B.H.C.	Ø B.H.	# B.H.	THK	Weight Lbs
SPFBL0400-E-CLN	4	9.00	BLIND	7.50	0.750	8	1.125	19.0
SPFBL0500-E-CLN	5	10.00	BLIND	8.50	0.875	8	1.188	24.0
SPFBL0600-E-CLN	6	11.00	BLIND	9.50	0.875	8	1.313	33.0
SPFBL0800-E-CLN	8	13.50	BLIND	11.75	0.875	8	1.500	58.0
SPFBL1000-E-CLN	10	16.00	BLIND	14.25	1.000	12	1.563	84.0
SPFBL1200-E-CLN	12	19.00	BLIND	17.00	1.000	12	1.750	135.0
SPFBL1400-E-CLN	14	21.00	BLIND	18.75	1.125	12	1.875	176.0
SPFBL1600-E-CLN	16	23.50	BLIND	21.25	1.125	16	2.000	234.0
SPFBL1800-E-CLN	18	25.00	BLIND	22.75	1.250	16	2.125	283.0
SPFBL2000-E-CLN	20	27.50	BLIND	25.00	1.250	20	2.375	382.0
SPFBL2200-E-CLN	22	29.50	BLIND	27.25	1.375	20	2.500	462.0
SPFBL2400-E-CLN	24	32.00	BLIND	29.50	1.375	20	2.625	575.0
SPFBL2600-E-CLN	26	34.25	BLIND	31.75	1.375	24	2.750	689.0
SPFBL2800-E-CLN	28	36.50	BLIND	34.00	1.375	28	2.750	782.0
SPFBL3000-E-CLN	30	38.75	BLIND	36.00	1.375	28	2.875	926.0
SPFBL3200-E-CLN	32	41.75	BLIND	38.50	1.625	28	3.000	1113.0
SPFBL3400-E-CLN	34	43.75	BLIND	40.50	1.625	32	3.050	1241.0
SPFBL3600-E-CLN	36	46.00	BLIND	42.75	1.625	32	3.209	1450.0
SPFBL3800-E-CLN	38	48.75	BLIND	45.25	1.625	32	3.394	1730.0
SPFBL4000-E-CLN	40	50.75	BLIND	47.25	1.625	36	3.533	1949.0
SPFBL4200-E-CLN	42	53.00	BLIND	49.50	1.625	36	3.695	2230.0
SPFBL4400-E-CLN	44	55.25	BLIND	51.75	1.625	40	3.857	2528.0
SPFBL4600-E-CLN	46	57.25	BLIND	53.75	1.625	40	3.997	2819.0
SPFBL4800-E-CLN	48	59.50	BLIND	56.00	1.625	44	4.159	3167.0
SPFBL5000-E-CLN	50	61.75	BLIND	58.25	1.875	44	4.327	3520.0
SPFBL5200-E-CLN	52	64.00	BLIND	60.50	1.875	44	4.489	3935.0
SPFBL5400-E-CLN	54	66.25	BLIND	62.75	1.875	44	4.651	4380.0
SPFBL6000-E-CLN	60	73.00	BLIND	69.25	1.875	52	5.116	5855.0
SPFBL6600-E-CLN	66	80.00	BLIND	76.00	1.875	52	5.601	7745.0
SPFBL7200-E-CLN	72	86.50	BLIND	82.50	1.875	60	6.066	9810.0

Notes:

a. Dual grades 304/304L & 316/316L Stainless Steel material conforms to the requirements of AWWA C228 specifications.

b. Meets ANSI/ASME Class 150 bolt pattern.

c. Pressure Ratings: up to 275psi at atmospheric temperature.

d. These products have been certified by NSF® against the requirements of NSF/ANSI/CAN 61 and NSF/ANSI/CAN 372.

e. ALL DIMENSIONS ARE IN INCHES UNLESS OTHERWISE STATED.

Certified to NSF/ANSI/CAN 61-G & 372

DC# 0826

CleanLine

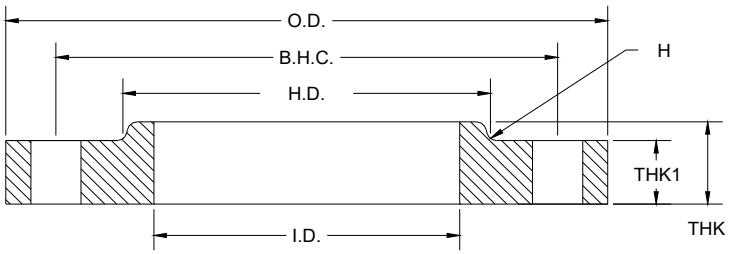



ANSI/ASME B16.5

Class 150 Forged Stainless Steel Flat Face Slip-on Flanges (NSF-61-372)

API Part Number	Size	O.D.	I.D.	Ø B.H.C.	Ø B.H.	# B.H.	THK1	THK2	H.D.	RH (RAD)	Weight Lbs
SFFS0050-CLN	0.5	3.50	0.88	2.38	0.63	4	0.44	0.63	1.38	0.188	1.2
SFFS0075-CLN	0.75	3.88	1.09	2.75	0.63	4	0.50	0.63	1.69	0.188	1.6
SFFS0100-CLN	1	4.25	1.36	3.13	0.63	4	0.56	0.69	2.00	0.188	2
SFFS0125-CLN	1.25	4.63	1.70	3.50	0.63	4	0.63	0.81	2.50	0.188	3
SFFS0150-CLN	1.5	5.00	1.95	3.88	0.63	4	0.69	0.88	2.88	0.188	3
SFFS0200-CLN	2	6.00	2.44	4.75	0.75	4	0.75	1.00	3.63	0.188	5
SFFS0250-CLN	2.5	7.00	2.94	5.50	0.75	4	0.88	1.13	4.13	0.188	8
SFFS0300-CLN	3	7.50	3.57	6.00	0.75	4	0.94	1.19	5.00	0.188	9
SFFS0350-CLN	3.5	8.50	4.07	7.00	0.75	8	0.94	1.25	5.50	0.188	11
SFFS0400-CLN	4	9.00	4.57	7.50	0.75	8	0.94	1.31	6.19	0.188	13
SFFS0500-CLN	5	10.00	5.66	8.50	0.88	8	0.94	1.44	7.31	0.188	15
SFFS0600-CLN	6	11.00	6.72	9.50	0.88	8	1.00	1.56	8.50	0.250	17
SFFS0800-CLN	8	13.50	8.72	11.75	0.88	8	1.13	1.75	10.63	0.250	28
SFFS1000-CLN	10	16.00	10.88	14.25	1.00	12	1.19	1.94	12.75	0.250	40
SFFS1200-CLN	12	19.00	12.88	17.00	1.00	12	1.25	2.19	15.00	0.313	61
SFFS1400-CLN	14	21.00	14.14	18.75	1.13	12	1.38	2.25	16.25	0.313	83
SFFS1600-CLN	16	23.50	16.16	21.25	1.13	16	1.44	2.50	18.50	0.313	106
SFFS1800-CLN	18	25.00	18.18	22.75	1.25	16	1.56	2.69	21.00	0.313	109
SFFS2000-CLN	20	27.50	20.20	25.00	1.25	20	1.69	2.88	23.00	0.313	148
SFFS2200-CLN	22	29.50	22.22	27.25	1.38	20	1.84	3.13	25.25	0.313	174
SFFS2400-CLN	24	32.00	24.19	29.50	1.38	20	1.88	3.25	27.25	0.313	204

Notes:

a. Dimensions and Tolerances per ANSI/ASME B16.5 (½" to 24"). For sizes ≥26", please contact our sales team.
b. Meets ANSI/ASME Class 150 bolt pattern.
c. ASTM A182 in dual Grades 304/304L or 316/316L stainless steel.
d. These products have been certified by NSF® against the requirements of NSF/ANSI/CAN 61 and NSF/ANSI/CAN 372.
e. ALL DIMENSIONS ARE IN INCHES UNLESS OTHERWISE STATED.

NSF
Certified to
NSF/ANSI/CAN 61-G & 372

INDEPENDENTLY NSF CERTIFIED

CleanLine

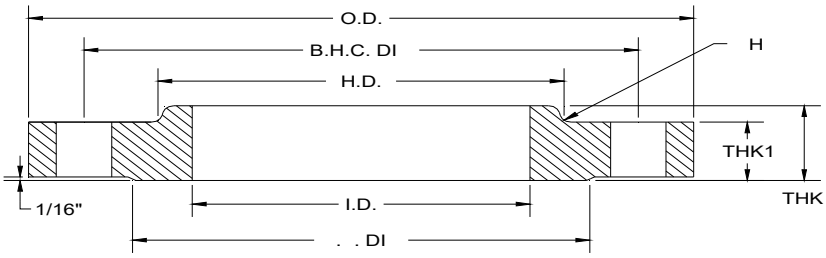



ANSI/ASME B16.5

Class 150 Forged Stainless Steel Raised Face Slip-on Flanges (NSF-61-372)

API Part Number	Size	O.D.	I.D.	Ø B.H.C.	Ø B.H.	# B.H.	THK1	THK2	H.D.	RF DIA	RH (RAD)	Weight Lbs
SRFS0050-CLN	0.5	3.50	0.88	2.38	0.630	4	0.44	0.63	1.19	1.38	0.188	1.2
SRFS0075-CLN	0.75	3.88	1.09	2.75	0.630	4	0.50	0.63	1.50	1.69	0.188	1.6
SRFS0100-CLN	1	4.25	1.36	3.13	0.630	4	0.56	0.69	1.94	2.00	0.188	2.0
SRFS0125-CLN	1.25	4.63	1.70	3.50	0.630	4	0.63	0.81	2.31	2.50	0.188	3.0
SRFS0150-CLN	1.5	5.00	1.95	3.88	0.630	4	0.69	0.880	2.56	2.88	0.188	3.0
SRFS0200-CLN	2	6.00	2.44	4.75	0.750	4	0.75	1.00	3.06	3.63	0.188	5.0
SRFS0250-CLN	2.5	7.00	2.94	5.50	0.750	4	0.88	1.13	3.56	4.13	0.188	8.0
SRFS0300-CLN	3	7.50	3.57	6.00	0.750	4	0.94	1.19	4.25	5.00	0.188	9.0
SRFS0350-CLN	3.5	8.50	4.07	7.00	0.750	8	0.94	1.25	4.81	5.50	0.188	11.0
SRFS0400-CLN	4	9.00	4.57	7.50	0.750	8	0.94	1.31	5.31	6.19	0.188	13.0
SRFS0500-CLN	5	10.00	5.66	8.50	0.875	8	0.94	1.44	6.44	7.31	0.188	15.0
SRFS0600-CLN	6	11.00	6.72	9.50	0.875	8	1.00	1.56	7.56	8.50	0.250	17.0
SRFS0800-CLN	8	13.50	8.72	11.75	0.875	8	1.13	1.75	9.69	10.63	0.250	28.0
SRFS1000-CLN	10	16.00	10.88	14.25	1.000	12	1.19	1.94	12.00	12.75	0.250	40.0
SRFS1200-CLN	12	19.00	12.88	17.00	1.000	12	1.25	2.19	14.38	15.00	0.313	61.0
SRFS1400-CLN	14	21.00	14.14	18.75	1.125	12	1.38	2.25	15.75	16.25	0.313	83.0
SRFS1600-CLN	16	23.50	16.16	21.25	1.125	16	1.44	2.50	18.00	18.50	0.313	106.0
SRFS1800-CLN	18	25.00	18.18	22.75	1.250	16	1.56	2.69	19.88	21.00	0.313	109.0
SRFS2000-CLN	20	27.50	20.20	25.00	1.250	20	1.69	2.88	22.00	23.00	0.313	148.0
SRFS2200-CLN	22	29.50	22.22	27.25	1.375	20	1.81	3.12	24.25	25.25	0.313	174.0
SRFS2400-CLN	24	32.00	24.25	29.50	1.375	20	1.88	3.25	26.13	27.25	0.313	204.0

Notes:

a. Dimensions and Tolerances per ANSI/ASME B16.5 (½" to 24"). For sizes ≥26", please contact our sales team.

b. Meets ANSI/ASME Class 150 bolt pattern.

c. ASTM A182 in dual Grades 304/304L or 316/316L stainless steel.

d. These products have been certified by NSF® against the requirements of NSF/ANSI/CAN 61 and NSF/ANSI/CAN 372.

e. ALL DIMENSIONS ARE IN INCHES UNLESS OTHERWISE STATED.

NSF

Certified to
NSF/ANSI/CAN 61-G & 372

INDEPENDENTLY NSF CERTIFIED®

CleanLine

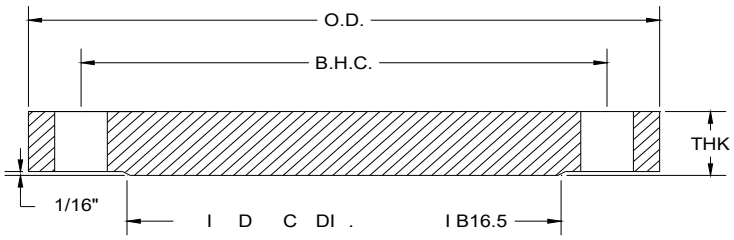



ANSI/ASME B16.5

Class 150 Forged Stainless Steel Raised Face Blind Flanges (NSF-61-372)

API Part Number	Size	O.D.	I.D.	Ø B.H.C.	Ø B.H.	# B.H.	THK	RF DIA	Weight Lbs
SRFB0050-CLN	0.5	3.50	BLIND	2.38	0.630	4	0.44	1.38	3.0
SRFB0075-CLN	0.75	3.88	BLIND	2.75	0.630	4	0.50	1.69	4.0
SRFB0100-CLN	1	4.25	BLIND	3.13	0.630	4	0.56	2.00	4.5
SRFB0125-CLN	1.25	4.63	BLIND	3.50	0.630	4	0.63	2.50	5.0
SRFB0150-CLN	1.5	5.00	BLIND	3.88	0.630	4	0.69	2.88	5.5
SRFB0200-CLN	2	6.00	BLIND	4.75	0.750	4	0.75	3.63	6.0
SRFB0250-CLN	2.5	7.00	BLIND	5.50	0.750	4	0.88	4.13	9.0
SRFB0300-CLN	3	7.50	BLIND	6.00	0.750	4	0.94	5.00	11.5
SRFB0350-CLN	3.5	8.50	BLIND	7.00	0.750	8	0.94	5.50	13.5
SRFB0400-CLN	4	9.00	BLIND	7.50	0.750	8	0.94	6.19	15.5
SRFB0500-CLN	5	10.00	BLIND	8.50	0.875	8	0.94	7.31	19.5
SRFB0600-CLN	6	11.00	BLIND	9.50	0.875	8	1.00	8.50	25.5
SRFB0800-CLN	8	13.50	BLIND	11.75	0.875	8	1.13	10.63	44.5
SRFB1000-CLN	10	16.00	BLIND	14.25	1.000	12	1.19	12.75	67.0
SRFB1200-CLN	12	19.00	BLIND	17.00	1.000	12	1.25	15.00	98.0
SRFB1400-CLN	14	21.00	BLIND	18.75	1.125	12	1.38	16.25	134.0
SRFB1600-CLN	16	23.50	BLIND	21.25	1.125	16	1.44	18.50	176.0
SRFB1800-CLN	18	25.00	BLIND	22.75	1.250	16	1.56	21.00	215.0
SRFB2000-CLN	20	27.50	BLIND	25.00	1.250	20	1.69	23.00	286.0
SRFB2200-CLN	22	29.50	BLIND	27.25	1.375	20	1.84	25.25	358.0
SRFB2400-CLN	24	32.00	BLIND	29.50	1.375	20	1.88	27.25	426.0

Notes:

a. Dimensions and Tolerances per ASME B16.5 (½" to 24").

b. Meets ANSI/ASME Class 150 bolt pattern.

c. ASTM A182 or ASTM A240 in dual Grades 304/304L or 316/316L stainless steel.

d. These products have been certified by NSF® against the requirements of NSF/ANSI/CAN 61 and NSF/ANSI/CAN 372.

e. ALL DIMENSIONS ARE IN INCHES UNLESS OTHERWISE STATED.

NSF

Certified to
NSF/ANSI/CAN 61-G & 372

INDEPENDENTLY NSF CERTIFIED®

CleanLine

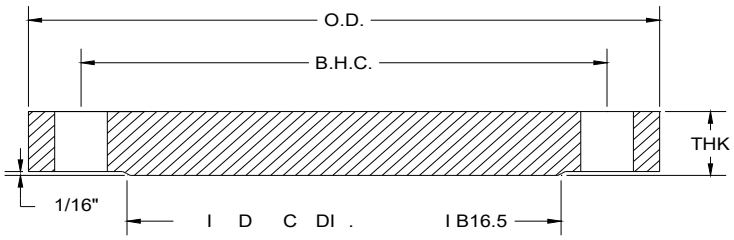



ANSI/ASME B16.47 Series A
Class 150 Forged Stainless Steel Raised Face Blind Flanges (NSF-61-372)

API Part Number	Size	O.D.	I.D.	Ø B.H.C.	Ø B.H.	# B.H.	THK	RF DIA	Weight Lbs
SRFB2600-150A-CLN	26	34.25	BLIND	31.75	1.375	24	2.63	29.50	373.0
SRFB2800-150A-CLN	28	36.50	BLIND	34.00	1.375	28	2.75	31.50	454.0
SRFB3000-150A-CLN	30	38.75	BLIND	36.00	1.375	28	2.88	33.75	543.0
SRFB3200-150A-CLN	32	41.75	BLIND	38.50	1.625	28	3.13	36.00	648.0
SRFB3400-150A-CLN	34	43.75	BLIND	40.50	1.625	32	3.19	38.00	783.0
SRFB3600-150A-CLN	36	46.00	BLIND	42.75	1.625	32	3.50	40.25	890.0
SRFB3800-150A-CLN	38	48.75	BLIND	45.25	1.625	32	3.35	42.25	1089.0
SRFB4000-150A-CLN	40	50.75	BLIND	47.25	1.625	36	3.50	44.25	1247.0
SRFB4200-150A-CLN	42	53.00	BLIND	49.50	1.625	36	3.75	47.00	1393.0
SRFB4400-150A-CLN	44	55.25	BLIND	51.75	1.625	40	3.94	49.00	1579.0
SRFB4600-150A-CLN	46	57.25	BLIND	53.75	1.625	40	4.00	51.00	1834.0
SRFB4800-150A-CLN	48	59.50	BLIND	56.00	1.625	44	4.19	53.50	2045.0
SRFB5000-150A-CLN	50	61.75	BLIND	58.25	1.875	44	4.32	55.50	2284.0
SRFB5200-150A-CLN	52	64.00	BLIND	60.50	1.875	44	4.50	57.50	2547.0
SRFB5400-150A-CLN	54	66.25	BLIND	62.75	1.875	44	4.69	59.50	2848.0
SRFB5600-150A-CLN	56	68.75	BLIND	65.00	1.875	48	4.82	62.00	3144.0
SRFB5800-150A-CLN	58	71.00	BLIND	67.25	1.875	48	5.00	64.00	3560.0
SRFB6000-150A-CLN	60	73.00	BLIND	69.25	1.875	52	5.13	66.00	3913.0

Notes:

a. Dimensions and Tolerances per ANSI/ASME B16.47 Series A.

b. Meets ANSI/ASME Class 150 bolt pattern.

c. ASTM A182 or ASTM A240 in dual Grades 304/304L or 316/316L stainless steel.

d. These products have been certified by NSF® against the requirements of NSF/ANSI/CAN 61 and NSF/ANSI/CAN 372.

e. ALL DIMENSIONS ARE IN INCHES UNLESS OTHERWISE STATED.

NSF

Certified to
NSF/ANSI/CAN 61-G & 372

INDEPENDENTLY NSF CERTIFIED®

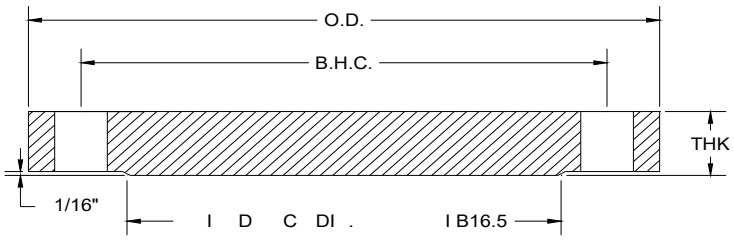



ANSI/ASME B16.47 Series B
Class 150 Forged Stainless Steel Raised Face Blind Flanges (NSF-61-372)

API Part Number	Size	O.D.	I.D.	Ø B.H.C.	Ø B.H.	# B.H.	THK	RF DIA	Weight Lbs
SRFB2600-150B-CLN	26	30.94	BLIND	29.31	0.875	36	1.69	28.00	373.0
SRFB2800-150B-CLN	28	32.94	BLIND	31.31	0.875	40	1.82	30.00	454.0
SRFB3000-150B-CLN	30	34.94	BLIND	33.31	0.875	44	1.94	32.00	543.0
SRFB3200-150B-CLN	32	37.06	BLIND	35.44	0.875	48	2.07	34.00	648.0
SRFB3400-150B-CLN	34	39.56	BLIND	37.69	1.000	40	2.19	36.25	783.0
SRFB3600-150B-CLN	36	41.62	BLIND	39.75	1.000	44	2.25	38.25	890.0
SRFB3800-150B-CLN	38	44.25	BLIND	42.12	1.125	40	2.44	40.25	1089.0
SRFB4000-150B-CLN	40	46.25	BLIND	44.12	1.125	44	2.57	42.5	1247.0
SRFB4200-150B-CLN	42	48.25	BLIND	46.12	1.125	48	2.63	44.5	1393.0
SRFB4400-150B-CLN	44	50.25	BLIND	48.12	1.125	52	2.75	46.5	1579.0
SRFB4600-150B-CLN	46	52.81	BLIND	50.56	1.250	40	2.88	48.62	1834.0
SRFB4800-150B-CLN	48	54.81	BLIND	52.56	1.250	44	3.00	50.75	2045.0
SRFB5000-150B-CLN	50	56.81	BLIND	54.56	1.250	48	3.13	52.75	2284.0
SRFB5200-150B-CLN	52	58.81	BLIND	56.56	1.250	52	3.25	54.75	2547.0
SRFB5400-150B-CLN	54	61.00	BLIND	58.75	1.250	56	3.38	56.75	2848.0
SRFB5600-150B-CLN	56	63.00	BLIND	60.75	1.375	60	3.50	58.75	3144.0
SRFB5800-150B-CLN	58	65.94	BLIND	63.44	1.375	48	3.62	60.75	3560.0
SRFB6000-150B-CLN	60	67.94	BLIND	65.44	1.375	52	3.75	63.00	3913.0

Notes:

a. Dimensions and Tolerances per ANSI/ASME B16.47 Series B.

b. Meets ANSI/ASME Class 150 bolt pattern.

c. ASTM A182 or ASTM A240 in dual Grades 304/304L or 316/316L stainless steel.

d. These products have been certified by NSF® against the requirements of NSF/ANSI/CAN 61 and NSF/ANSI/CAN 372.

e. ALL DIMENSIONS ARE IN INCHES UNLESS OTHERWISE STATED.

Certified to NSF/ANSI/CAN 61-G & 372

INDEPENDENTLY NSF CERTIFIED®

CleanLine

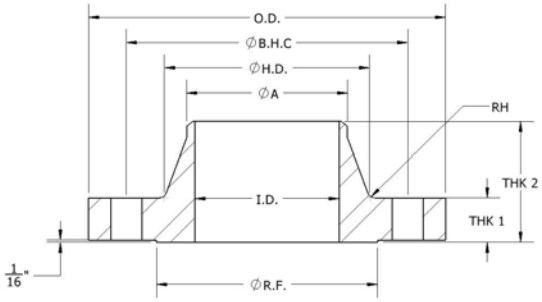



ANSI/ASME B16.5

Class 150 Forged Stainless Steel Raised Face Weld-Neck Flanges (NSF-61-372)

API Part Number	Size	O.D.	I.D.	Ø B.H.C.	ØB.H	#B.H	THK1	THK2	Ø H.D.	Ø A (Weld Point)	Ø RF	RH (RAD)	Weight Lbs
SRFWN0050-S40-CLN	0.5	3.50	0.62	2.38	0.63	4	0.44	1.81	1.19	0.84	1.38	0.188	1.25
SRFWN0075-S40-CLN	0.75	3.88	0.82	2.75	0.63	4	0.50	2.00	1.50	1.05	1.69	0.188	1.70
SRFWN0100-S40-CLN	1	4.25	1.05	3.13	0.63	4	0.56	2.12	1.32	1.32	2.00	0.188	2.30
SRFWN0125-S40-CLN	1.25	4.63	1.38	3.50	0.63	4	0.63	2.19	1.66	1.66	2.50	0.188	3.10
SRFWN0150-S40-CLN	1.5	5.00	1.61	3.88	0.63	4	0.69	2.38	1.90	1.90	2.88	0.188	3.50
SRFWN0200-S40-CLN	2	6.00	2.07	4.75	0.75	4	0.75	2.44	2.38	2.38	3.63	0.188	5.00
SRFWN0250-S40-CLN	2.5	7.00	2.47	5.50	0.75	4	0.88	2.69	2.88	2.88	4.13	0.188	9.50
SRFWN0300-S40-CLN	3	7.50	3.07	6.00	0.75	4	0.94	2.69	3.50	3.50	5.00	0.188	12.00
SRFWN0350-S40-CLN	3.5	8.50	3.55	7.00	0.75	8	0.94	2.75	4.00	4.00	5.50	0.188	11.00
SRFWN0400-S40-CLN	4	9.00	4.03	7.50	0.75	8	0.94	2.94	4.50	4.50	6.19	0.188	16.83
SRFWN0500-S40-CLN	5	10.00	5.05	8.50	0.88	8	0.94	3.44	5.56	5.56	7.31	0.188	19.70
SRFWN0600-S40-CLN	6	11.00	6.07	9.50	0.88	8	1.00	3.44	6.63	6.63	8.50	0.250	22.77
SRFWN0800-S40-CLN	8	13.50	7.98	11.75	0.88	8	1.13	3.94	8.63	8.63	10.63	0.250	42.00
SRFWN1000-S40-CLN	10	16.00	10.02	14.25	1.00	12	1.19	3.94	10.75	10.75	12.75	0.250	56.50
SRFWN1200-S40-CLN	12	19.00	11.94	17.00	1.00	12	1.25	4.44	12.75	12.75	15.00	0.313	91.00
SRFWN1400-S40-CLN	14	21.00	13.12	18.75	1.13	12	1.38	4.94	14.00	14.00	16.25	0.313	114.00
SRFWN1600-S40-CLN	16	23.50	15.00	21.25	1.13	16	1.44	4.94	16.00	16.00	18.50	0.313	140.00
SRFWN1800-S40-CLN	18	25.00	16.88	22.75	1.25	16	1.56	5.44	18.00	18.00	21.00	0.313	150.00
SRFWN2000-S40-CLN	20	27.50	18.81	25.00	1.25	20	1.69	5.62	20.00	20.00	23.00	0.313	197.00
SRFWN2200-STD-CLN	22	29.50	21.25	27.25	1.38	20	1.75	5.82	24.00	22.00	25.25	0.313	206.50
SRFWN2400-S40-CLN	24	32.00	22.62	29.50	1.38	20	1.88	5.94	26.12	24.00	27.25	0.313	260.00

Notes:

a. Dimensions and Tolerances per ASME B16.5 (½" to 24").
b. Meets ANSI/ASME Class 150 bolt pattern.
c. ASTM A182 in dual Grades 304/304L or 316/316L stainless steel.
d. Weld Neck Flanges listed above are for Schedule 40 Pipe (excluding 22"-STD).
e. Weld Neck Flanges from NPS 1/2" to 10" also correspond to Standard Schedule Pipe (STD).
f. Weld Neck Flanges for other Pipe Schedules are available upon request.
g. These products have been certified by NSF® against the requirements of NSF/ANSI/CAN 61 and NSF/ANSI/CAN 372.
h. ALL DIMENSIONS ARE IN INCHES UNLESS OTHERWISE STATED.

NSF
Certified to
NSF/ANSI/CAN 61-G & 372

INDEPENDENTLY NSF CERTIFIED®

CleanLine

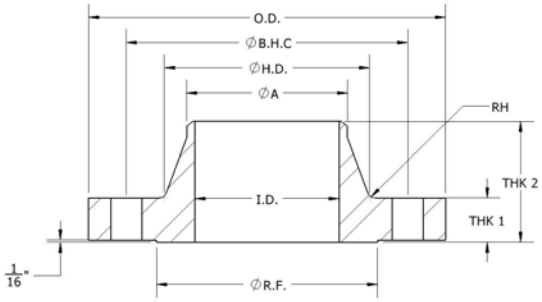



ANSI/ASME B16.47 Series A

Class 150 Forged Stainless Steel Raised Face Weld-Neck Flanges (NSF-61-372)

API Part Number	Size	O.D.	I.D.	Ø B.H.C.	Ø B.H	#B.H	THK1	THK2	Ø H.D.	Ø A (Weld Point)	Ø RF	RH (RAD)	Weight Lbs
SRFWN2600-150A-CLN	26	34.25	SPECIFIED BY PURCHASER	31.75	1.375	24	2.63	4.69	26.62	26	29.50	0.38	120.0
SRFWN2800-150A-CLN	28	36.50		34.00	1.375	28	2.75	4.88	28.62	28	31.50	0.44	140.0
SRFWN3000-150A-CLN	30	38.75		36.00	1.375	28	2.88	5.32	30.75	30	33.75	0.44	150.0
SRFWN3200-150A-CLN	32	41.75		38.50	1.625	28	3.13	5.63	32.75	32	36.00	0.44	170.0
SRFWN3400-150A-CLN	34	43.75		40.50	1.625	32	3.19	5.82	34.75	34	38.00	0.50	210.0
SRFWN3600-150A-CLN	36	46.00		42.75	1.625	32	3.50	6.13	36.75	36	40.25	0.50	240.0
SRFWN3800-150A--CLN	38	48.75		45.25	1.625	32	3.38	6.13	39.00	38	42.25	0.50	290.0
SRFWN4000-150A-CLN	40	50.75		47.25	1.625	36	3.50	6.38	41.00	40	44.25	0.50	310.0
SRFWN4200-150A-CLN	42	53.00		49.50	1.625	36	3.75	6.69	43.00	42	47.00	0.50	345.0
SRFWN4400-150A-CLN	44	55.25		51.75	1.625	40	3.94	6.94	45.00	44	49.00	0.50	370.0
SRFWN4600-150A-CLN	46	57.25		53.75	1.625	40	4.00	7.25	47.12	46	51.00	0.50	435.0
SRFWN4800-150A-CLN	48	59.50		56.00	1.625	44	4.19	7.50	49.12	48	53.50	0.50	480.0
SRFWN5000-150A-CLN	50	61.75		58.25	1.875	44	4.32	7.94	51.25	50	55.50	0.50	520.0
SRFWN5200-150A-CLN	52	64.00		60.50	1.875	44	4.50	8.19	53.25	52	57.50	0.50	550.0
SRFWN5400-150A-CLN	54	66.25		62.75	1.875	44	4.69	8.44	55.25	54	59.50	0.50	620.0
SRFWN5600-150A-CLN	56	68.75		65.00	1.875	48	4.82	8.94	57.38	58	62.00	0.50	650.0
SRFWN5800-150A-CLN	58	71.00		67.25	1.875	48	5.00	9.19	59.38	58	64.00	0.50	780.0
SRFWN6000-150A-CLN	60	73.00		69.25	1.875	52	5.13	9.38	61.38	60	66.00	0.50	850.0

Notes:

a. Dimensions and Tolerances per ANSI/ASME B16.47 Series A (26" to 60").

b. Meets ANSI/ASME Class 150 bolt pattern.

c. ASTM A182 in dual Grades 304/304L or 316/316L stainless steel.

d. Wall thickness of pipe to be specified by purchaser. Weld Neck Flanges for various pipe schedules are available upon request.

e. These products have been certified by NSF® against the requirements of NSF/ANSI/CAN 61 and NSF/ANSI/CAN 372.

f. ALL DIMENSIONS ARE IN INCHES UNLESS OTHERWISE STATED.

NSF

Certified to
NSF/ANSI/CAN 61-G & 372

INDEPENDENTLY NSF CERTIFIED®

CleanLine

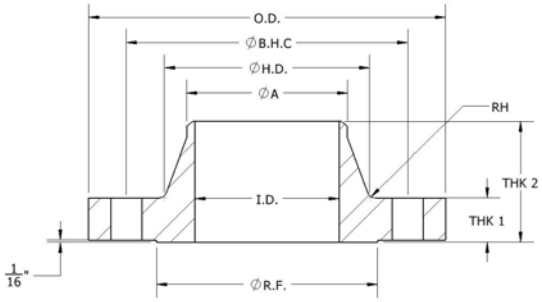



ANSI/ASME B16.47 Series B

Class 150 Forged Stainless Steel Raised Face Weld-Neck Flanges (NSF-61-372)

API Part Number	Size	O.D.	I.D.	Ø B.H.C.	Ø B.H	#B.H	THK1	THK2	Ø H.D.	Ø A (Weld Point)	Ø RF	RH (RAD)	Weight Lbs
SRFWN2600-150B-CLN	26	30.94	SPECIFIED BY PURCHASER	29.31	0.875	36	1.57	3.44	26.94	26.06	28.00	0.38	120.0
SRFWN2800-150B-CLN	28	32.94		31.31	0.875	40	1.69	3.69	28.94	28.06	30.00	0.38	140.0
SRFWN3000-150B-CLN	30	34.94		33.31	0.875	44	1.69	3.88	31.00	30.06	32.00	0.38	150.0
SRFWN3200-150BCLN	32	37.06		35.44	0.875	48	1.75	4.19	33.06	32.06	34.00	0.38	170.0
SRFWN3400-150B-CLN	34	39.56		37.69	1.000	40	1.88	4.28	35.12	34.06	36.25	0.38	210.0
SRFWN3600-150B-CLN	36	41.62		39.75	1.000	44	2.00	4.57	37.19	36.06	38.25	0.38	240.0
SRFWN3800-150B–CLN	38	44.25		42.12	1.125	40	2.07	4.82	39.25	38.12	40.25	0.38	290.0
SRFWN4000-150BCLN	40	46.25		44.12	1.125	44	2.13	5.00	41.31	40.12	42.50	0.38	310.0
SRFWN4200-150B-CLN	42	48.25		46.12	1.125	48	2.25	5.19	43.38	42.12	44.50	0.44	345.0
SRFWN4400-150B-CLN	44	50.25		48.12	1.125	52	2.32	5.32	45.38	44.12	46.50	0.44	370.0
SRFWN4600-150B-CLN	46	52.81		50.56	1.250	40	2.38	5.63	47.44	46.12	48.62	0.44	435.0
SRFWN4800-150B-CLN	48	54.81		52.56	1.250	44	2.50	5.82	49.50	48.12	50.75	0.44	480.0
SRFWN5000-150B-CLN	50	56.81		54.56	1.250	48	2.63	6.00	51.50	50.12	52.75	0.44	520.0
SRFWN5200-150B-CLN	52	58.81		56.56	1.250	52	2.69	6.13	53.56	52.12	54.75	0.44	550.0
SRFWN5400-150B-CLN	54	61.00		58.75	1.250	56	2.75	6.32	55.62	54.12	56.75	0.44	620.0
SRFWN5600-150B-CLN	56	63.00		60.75	1.250	60	2.82	6.50	57.69	56.12	58.75	0.56	650.0
SRFWN5800-150B-CLN	58	65.94		63.44	1.375	48	2.88	6.82	59.69	58.12	60.75	0.56	780.0
SRFWN6000-150B-CLN	60	67.94		65.44	1.375	52	2.94	7.00	61.81	60.12	63.00	0.56	850.0

Notes:

a. Dimensions and Tolerances per ANSI/ASME B16.47 Series B (26" to 60").

b. Meets ANSI/ASME Class 150 bolt pattern.

c. ASTM A182 in dual Grades 304/304L or 316/316L stainless steel.

d. Wall thickness of pipe to be specified by purchaser. Weld Neck Flanges for various pipe schedules are available upon request.

e. These products have been certified by NSF® against the requirements of NSF/ANSI/CAN 61 and NSF/ANSI/CAN 372.

f. ALL DIMENSIONS ARE IN INCHES UNLESS OTHERWISE STATED.

NSF

Certified to
NSF/ANSI/CAN 61-G & 372

INDEPENDENTLY NSF CERTIFIED®

Notes

Light Weight Flanges

(1/2" & 5/8" Thick)

Domestic (AIS) & Import







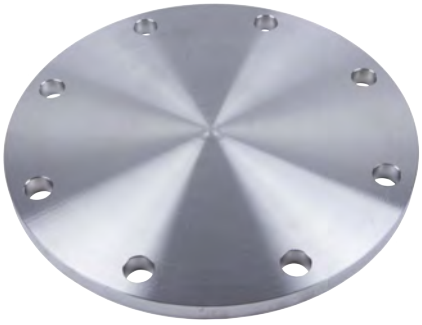

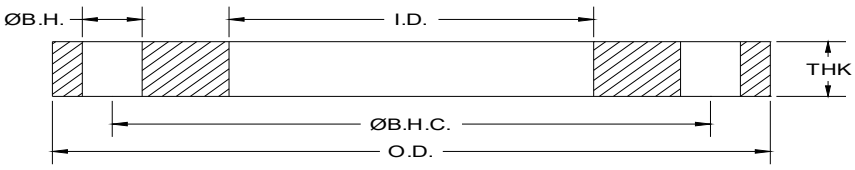

1/2" Thick Steel Slip-on Flanges

API Part Number	Size	O.D.	I.D.	Ø B.H.C.	Ø B.H.	# B.H.	THK	Weight Lbs
PFH0100	1	4.25	1.36	3.13	0.630	4	0.500	1.8
PFH0200	2	6.00	2.44	4.75	0.750	4	0.500	3.1
PFH0250	2.5	7.00	2.94	5.50	0.750	4	0.500	4.2
PFH0300	3	7.50	3.57	6.00	0.750	4	0.500	4.7
PFH0350	3.5	8.50	4.07	7.00	0.750	8	0.500	5.5
PFH0400	4	9.00	4.57	7.50	0.750	8	0.500	6.4
PFH0500	5	10.00	5.66	8.50	0.875	8	0.500	7.2
PFH0600	6	11.00	6.72	9.50	0.875	8	0.500	8.4
PFH0800	8	13.50	8.72	11.75	0.875	8	0.500	11.4
PFH1000	10	16.00	10.88	14.25	1.000	12	0.500	14.6
PFH1200	12	19.00	12.88	17.00	1.000	12	0.500	21.6
PFH1400	14	21.00	14.19	18.75	1.125	12	0.500	25.0
PFH1600	16	23.50	16.19	21.25	1.125	16	0.500	30.0
PFH1800	18	25.00	18.19	22.75	1.250	16	0.500	30.0
PFH2000	20	27.50	20.19	25.00	1.250	20	0.500	36.0
PFH2200	22	29.50	22.19	27.25	1.375	20	0.500	40.0
PFH2400	24	32.00	24.19	29.50	1.375	20	0.500	45.0
PFH2600	26	34.25	26.19	31.75	1.375	24	0.500	48.0
PFH2800	28	36.50	28.19	34.00	1.375	28	0.500	54.0
PFH3000	30	38.75	30.19	36.00	1.375	28	0.500	61.0
PFH3200	32	41.75	32.19	38.50	1.625	28	0.500	74.0
PFH3400	34	43.75	34.19	40.50	1.625	32	0.500	80.0
PFH3600	36	46.00	36.19	42.75	1.625	32	0.500	83.0
PFH3800	38	48.75	38.19	45.25	1.625	32	0.500	93.0
PFH4000	40	50.75	40.19	47.25	1.625	36	0.500	96.0
PFH4200	42	53.00	42.19	49.50	1.625	36	0.500	107.0
PFH4400	44	55.25	44.19	51.75	1.625	40	0.500	111.0
PFH4600	46	57.25	46.19	53.75	1.625	40	0.500	115.0
PFH4800	48	59.50	48.19	56.00	1.625	44	0.500	122.0

Notes:

a. Flange material is steel (to AWWA C207 specifications). Specific grades of steel for structural or critical applications are available upon request.

b. Meets ASME/ANSI Class 150 bolt pattern.

ALL DIMENSIONS ARE IN INCHES UNLESS OTHERWISE STATED.

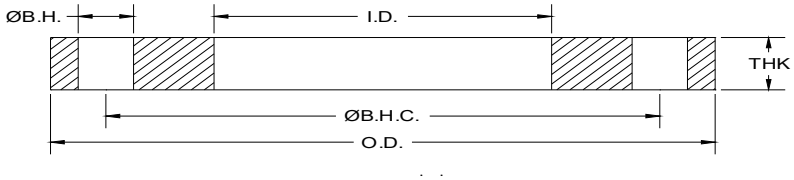



1/2" Thick Reducing Steel Flanges

API Part Number	Size	O.D.	I.D.	Ø B.H.C.	Ø B.H.	# B.H.	THK	Weight Lbs
PFHR0300-206	3 x 2	7.50	2.06	6.00	0.750	4	0.500	5.5
PFHR0400-306	4 x 3	9.00	3.06	7.50	0.750	8	0.500	8.0
PFHR0400-357	4 x 3	9.00	3.57	7.50	0.750	8	0.500	7.2
PFHR0500-306	5 x 3	10.00	3.06	8.50	0.875	8	0.500	9.5
PFHR0500-357	5 x 3	10.00	3.57	8.50	0.875	8	0.500	9.3
PFHR0500-406	5 x 4	10.00	4.06	8.50	0.875	8	0.500	8.8
PFHR0500-457	5 x 4	10.00	4.57	8.50	0.875	8	0.500	8.2
PFHR0600-406	6 x 4	11.00	4.06	9.50	0.875	8	0.500	12.0
PFHR0600-457	6 x 4	11.00	4.57	9.50	0.875	8	0.500	11.4
PFHR0600-506	6 x 5	11.00	5.06	9.50	0.875	8	0.500	10.8
PFHR0600-563	6 x 5	11.00	5.63	9.50	0.875	8	0.500	9.6
PFHR0800-406	8 x 4	13.50	4.06	11.75	0.875	8	0.500	17.7
PFHR0800-506	8 x 5	13.50	5.06	11.75	0.875	8	0.500	16.8
PFHR0800-563	8 x 5	13.50	5.63	11.75	0.875	8	0.500	16.1
PFHR0800-606	8 x 6	13.50	6.06	11.75	0.875	8	0.500	15.6
PFHR0800-672	8 x 6	13.50	6.72	11.75	0.875	8	0.500	14.7
PFHR1000-606	10 x 6	16.00	6.06	14.25	1.000	12	0.500	23.4
PFHR1000-672	10 x 6	16.00	6.72	14.25	1.000	12	0.500	26.0
PFHR1000-806	10 x 8	16.00	8.06	14.25	1.000	12	0.500	20.0
PFHR1000-872	10 x 8	16.00	8.72	14.25	1.000	12	0.500	19.3
PFHR1200-806	12 x 8	19.00	8.06	17.00	1.000	12	0.500	32.0
PFHR1200-1006	12 x 10	19.00	10.06	17.00	1.000	12	0.500	28.5
PFHR1200-1075	12 x 10	19.00	10.75	17.00	1.000	12	0.500	27.0
PFHR1200-1088	12 x 10	19.00	10.88	17.00	1.000	12	0.500	26.0
PFHR1400-806	14 x 8	21.00	8.06	18.75	1.125	12	0.500	40.1
PFHR1400-1006	14 x 10	21.00	10.06	18.75	1.125	12	0.500	36.1
PFHR1400-1206	14 x 12	21.00	12.06	18.75	1.125	12	0.500	32.0
PFHR1600-806	16 x 8	23.50	8.06	21.25	1.125	16	0.500	52.5
PFHR1600-1006	16 x 10	23.50	10.06	21.25	1.125	16	0.500	34.0
PFHR1600-1206	16 x 12	23.50	12.06	21.25	1.125	16	0.500	41.0
PFHR1600-1406	16 x 14	23.50	14.06	21.25	1.125	16	0.500	40.0
PFHR1800-1406	18 x 14	25.00	14.06	22.75	1.250	16	0.500	44.9
PFHR2000-1206	20 x 12	27.50	14.06	25.00	1.250	20	0.500	48.0
PFHR2200-2019	20 x 22	29.50	20.19	27.25	1.380	20	0.500	48.5

Notes:

a. Flange material is steel (to AWWA C207 specifications). Specific grades of steel for structural or critical applications are available upon request.

b. Meets ASME/ANSI Class 150 bolt pattern.

ALL DIMENSIONS ARE IN INCHES UNLESS OTHERWISE STATED.

1/2" Thick Steel Slip-on Flanges for O.D. Tubing

API Part Number	Size	O.D.	I.D.	Ø B.H.C.	Ø B.H.	# B.H.	THK	Weight Lbs
PFH0200-16	2	6.00	2.06	4.75	0.750	4	0.500	3.5
PFH0250-16	2.5	7.00	2.56	5.50	0.750	4	0.500	4.5
PFH0300-16	3	7.50	3.06	6.00	0.750	4	0.500	5.3
PFH0350-16	3.5	8.50	3.56	7.00	0.750	8	0.500	6.0
PFH0400-16	4	9.00	4.06	7.50	0.750	8	0.500	6.9
PFH0500-16	5	10.00	5.06	8.50	0.875	8	0.500	8.0
PFH0600-16	6	11.00	6.09	9.50	0.875	8	0.500	9.0
PFH0800-16	8	13.50	8.09	11.75	0.875	8	0.500	12.6
PFH1000-16	10	16.00	10.12	14.25	1.000	12	0.500	16.3
PFH1200-16	12	19.00	12.12	17.00	1.000	12	0.500	22.5

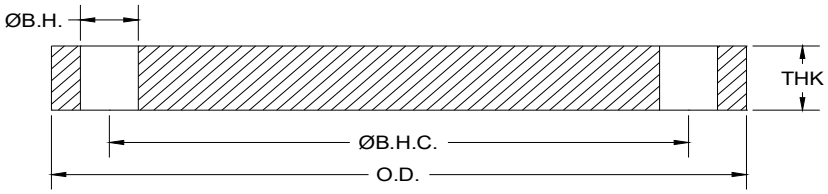



1/2" Thick Steel Blind Flanges

API Part Number	Size	O.D.	I.D.	Ø B.H.C.	Ø B.H.	# B.H.	THK	Weight Lbs
PFBH0200	2	6.00	BLIND	4.75	0.750	4	0.500	4.0
PFBH0250	2.5	7.00	BLIND	5.50	0.750	4	0.500	5.5
PFBH0300	3	7.50	BLIND	6.00	0.750	4	0.500	6.5
PFBH0350	3.5	8.50	BLIND	7.00	0.750	8	0.500	7.5
PFBH0400	4	9.00	BLIND	7.50	0.750	8	0.500	9.0
PFBH0500	5	10.00	BLIND	8.50	0.875	8	0.500	11.5
PFBH0600	6	11.00	BLIND	9.50	0.875	8	0.500	13.5
PFBH0800	8	13.50	BLIND	11.75	0.875	8	0.500	21.0
PFBH1000	10	16.00	BLIND	14.25	1.000	12	0.500	27.8
PFBH1200	12	19.00	BLIND	17.00	1.000	12	0.500	39.7
PFBH1400	14	21.00	BLIND	18.75	1.125	12	0.500	51.5
PFBH1600	16	23.50	BLIND	21.25	1.125	16	0.500	60.0
PFBH1800	18	25.00	BLIND	22.75	1.250	16	0.500	70.0
PFBH2000	20	27.50	BLIND	25.00	1.250	20	0.500	90.0
PFBH2200	22	29.50	BLIND	27.25	1.375	20	0.500	93.0
PFBH2400	24	32.00	BLIND	29.50	1.375	20	0.500	112.0
PFBH2600	26	34.25	BLIND	31.75	1.375	24	0.500	125.0
PFBH2800	28	36.50	BLIND	34.00	1.375	28	0.500	143.0
PFBH3000	30	38.75	BLIND	36.00	1.375	28	0.500	161.0
PFBH3200	32	41.75	BLIND	38.50	1.625	28	0.500	185.0
PFBH3400	34	43.75	BLIND	40.50	1.625	32	0.500	204.0
PFBH3600	36	46.00	BLIND	42.75	1.625	32	0.500	225.0

Notes:

a. Flange material is steel (to AWWA C207 specifications). Specific grades of steel for structural or critical applications are available upon request.

b. Meets ASME/ANSI Class 150 bolt pattern.

ALL DIMENSIONS ARE IN INCHES UNLESS OTHERWISE STATED.

DC# 0925

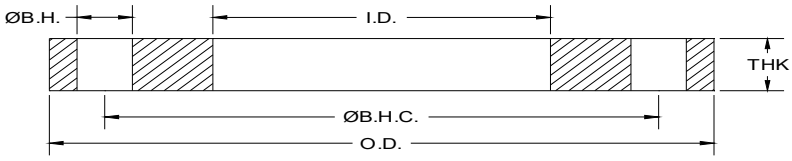



1/2" Thick Stainless Steel Slip-on Flanges for Pipe

API Part Number	Size	O.D.	I.D.	Ø B.H.C.	Ø B.H.	# B.H.	THK	Weight Lbs
SPFH0050	0.5	3.50	0.88	2.38	0.630	4	0.500	1.0
SPFH0075	0.75	3.88	1.09	2.75	0.630	4	0.500	1.3
SPFH0100	1	4.25	1.36	3.13	0.630	4	0.500	1.7
SPFH0125	1.25	4.63	1.70	3.50	0.630	4	0.500	2.3
SPFH0150	1.5	5.00	1.95	3.88	0.630	4	0.500	2.5
SPFH0200	2	6.00	2.44	4.75	0.750	4	0.500	3.0
SPFH0250	2.5	7.00	2.94	5.50	0.750	4	0.500	4.0
SPFH0300	3	7.50	3.57	6.00	0.750	4	0.500	4.7
SPFH0350	3.5	8.50	4.07	7.00	0.750	8	0.500	5.5
SPFH0400	4	9.00	4.57	7.50	0.750	8	0.500	6.4
SPFH0500	5	10.00	5.66	8.50	0.875	8	0.500	7.2
SPFH0600	6	11.00	6.72	9.50	0.875	8	0.500	8.4
SPFH0800	8	13.50	8.72	11.75	0.875	8	0.500	11.4
SPFH1000	10	16.00	10.88	14.25	1.000	12	0.500	14.6
SPFH1200	12	19.00	12.88	17.00	1.000	12	0.500	21.6
SPFH1400	14	21.00	14.19	18.75	1.125	12	0.500	26.5
SPFH1600	16	23.50	16.19	21.25	1.125	16	0.500	31.0
SPFH1800	18	25.00	18.19	22.75	1.250	16	0.500	32.0
SPFH2000	20	27.50	20.19	25.00	1.250	20	0.500	37.5
SPFH2200	22	29.50	22.19	27.25	1.375	20	0.500	38.5
SPFH2400	24	32.00	24.19	29.50	1.375	20	0.500	49.0
SPFH2600	26	34.25	26.19	31.75	1.375	24	0.500	52.0
SPFH2800	28	36.50	28.19	34.00	1.375	28	0.500	54.0
SPFH3000	30	38.75	30.19	36.00	1.375	28	0.500	65.0
SPFH3200	32	41.75	32.19	38.50	1.625	28	0.500	70.0
SPFH3400	34	43.75	34.19	40.50	1.625	32	0.500	74.0
SPFH3600	36	46.00	36.19	42.75	1.625	32	0.500	81.0
SPFH3800	38	48.75	38.19	45.25	1.625	32	0.500	93.0
SPFH4000	40	50.75	40.19	47.25	1.625	36	0.500	97.0
SPFH4200	42	53.00	42.19	49.50	1.625	36	0.500	104.0
SPFH4400	44	55.25	44.19	51.75	1.625	40	0.500	111.0
SPFH4600	46	57.25	46.19	53.75	1.625	40	0.500	118.0
SPFH4800	48	59.50	48.19	56.00	1.625	44	0.500	124.0

1/2" Thick Stainless Steel Slip-on Flanges for O.D. Tubing

API Part Number	Size	O.D.	I.D.	Ø B.H.C.	Ø B.H.	# B.H.	THK	Weight Lbs
SPFH0050-16	0.5	3.50	0.56	2.38	0.630	4	0.500	1.1
SPFH0075-16	0.75	3.88	0.81	2.75	0.630	4	0.500	1.5
SPFH0100-16	1	4.25	1.06	3.13	0.630	4	0.500	2.0
SPFH0125-16	1.25	4.63	1.31	3.50	0.630	4	0.500	2.6
SPFH0150-16	1.5	5.00	1.56	3.88	0.630	4	0.500	2.8
SPFH0200-16	2	6.00	2.06	4.75	0.750	4	0.500	3.5
SPFH0250-16	2.5	7.00	2.56	5.50	0.750	4	0.500	4.5
SPFH0300-16	3	7.50	3.06	6.00	0.750	4	0.500	5.3
SPFH0350-16	3.5	8.50	3.56	7.00	0.750	8	0.500	6.0
SPFH0400-16	4	9.00	4.06	7.50	0.750	8	0.500	6.9
SPFH0500-16	5	10.00	5.06	8.50	0.875	8	0.500	8.0
SPFH0600-16	6	11.00	6.09	9.50	0.875	8	0.500	9.0
SPFH0800-16	8	13.50	8.09	11.75	0.875	8	0.500	12.6
SPFH1000-16	10	16.00	10.12	14.25	1.000	12	0.500	16.3
SPFH1200-16	12	19.00	12.12	17.00	1.000	12	0.500	22.5

Notes: a. All Stainless Steel flanges available in Dual Grade 304/304L or 316/316L.

b. Meets ASME/ANSI Class 150 bolt pattern.

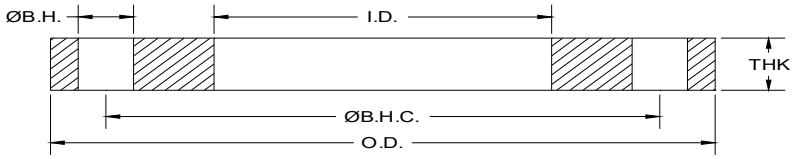



1/2" Thick Reducing Stainless Steel Flanges

API Part Number	Size	O.D.	I.D.	Ø B.H.C.	Ø B.H.	# B.H.	THK	Weight Lbs
SPFHR0500-406	5 x 4	10.00	4.06	8.50	0.88	8	0.500	9.0
SPFHR0600-406	6 x 4	11.00	4.06	9.50	0.88	8	0.500	11.0
SPFHR0600-506	6 x 5	11.00	5.06	9.50	0.88	8	0.500	10.5
SPFHR0800-506	8 x 5	13.50	5.06	11.75	0.88	8	0.500	18.0
SPFHR0800-606	8 x 6	13.50	6.06	11.75	0.88	8	0.500	16.5
SPFHR0800-672	8 x 6	13.50	6.72	11.75	0.88	8	0.500	15.0
SPFHR1000-606	10 x 6	16.00	6.06	14.25	1.00	12	0.500	18.0
SPFHR1000-806	10 x 8	16.00	8.06	14.25	1.00	12	0.500	20.0
SPFHR1200-1006	12 x 10	19.00	10.06	17.00	1.00	12	0.500	31.0
SPFHR1200-806	12 x 8	19.00	8.06	17.00	1.00	12	0.500	34.0
SPFHR1400-1288	14 x 12	21.00	12.88	18.75	1.13	12	0.500	28.0

Notes:

a. All Stainless Steel flanges available in Dual Grade 304/304L or 316/316L.

b. Meets ASME/ANSI Class 150 bolt pattern.

ALL DIMENSIONS ARE IN INCHES UNLESS OTHERWISE STATED.

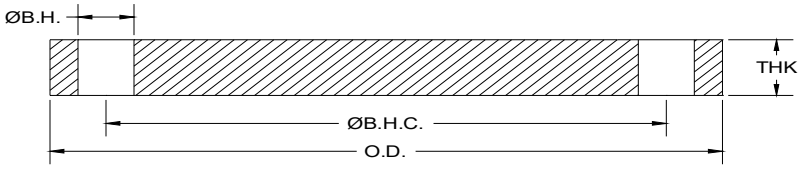



1/2" Thick Stainless Steel Blind Flanges

API Part Number	Size	O.D.	I.D.	Ø B.H.C.	Ø B.H.	# B.H.	THK	Weight Lbs
SPFBH0200	2	6.00	BLIND	4.75	0.750	4	0.500	4.0
SPFBH0250	2.5	7.00	BLIND	5.50	0.750	4	0.500	5.5
SPFBH0300	3	7.50	BLIND	6.00	0.750	4	0.500	6.2
SPFBH0350	3.5	8.50	BLIND	7.00	0.750	8	0.500	7.5
SPFBH0400	4	9.00	BLIND	7.50	0.750	8	0.500	9.1
SPFBH0500	5	10.00	BLIND	8.50	0.875	8	0.500	11.0
SPFBH0600	6	11.00	BLIND	9.50	0.875	8	0.500	14.3
SPFBH0800	8	13.50	BLIND	11.75	0.875	8	0.500	20.0
SPFBH1000	10	16.00	BLIND	14.25	1.000	12	0.500	27.0
SPFBH1200	12	19.00	BLIND	17.00	1.000	12	0.500	41.0
SPFBH1400	14	21.00	BLIND	18.75	1.125	12	0.500	51.2
SPFBH1600	16	23.50	BLIND	21.25	1.125	16	0.500	60.0
SPFBH1800	18	25.00	BLIND	22.75	1.250	16	0.500	70.3
SPFBH2000	20	27.50	BLIND	25.00	1.250	20	0.500	90.0
SPFBH2200	22	29.50	BLIND	27.25	1.375	20	0.500	93.0
SPFBH2400	24	32.00	BLIND	29.50	1.375	20	0.500	109.0
SPFBH2600	26	34.25	BLIND	31.75	1.375	24	0.500	126.0
SPFBH2800	28	36.50	BLIND	34.00	1.375	28	0.500	142.3
SPFBH3000	30	38.75	BLIND	36.00	1.375	28	0.500	161.1
SPFBH3200	32	41.75	BLIND	38.50	1.625	28	0.500	185.2
SPFBH3400	34	43.75	BLIND	40.50	1.625	32	0.500	203.0
SPFBH3600	36	46.00	BLIND	42.75	1.625	32	0.500	225.0

Notes:

a. All Stainless Steel flanges available in Dual Grade 304/304L or 316/316L.

b. Meets ASME/ANSI Class 150 bolt pattern.

ALL DIMENSIONS ARE IN INCHES UNLESS OTHERWISE STATED.

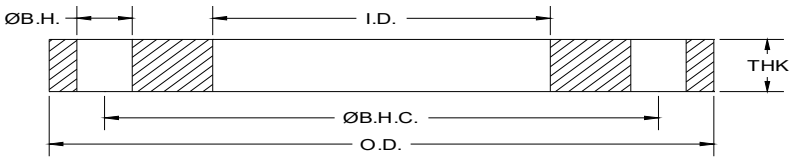



5/8" Thick Class 150IPS Slip-on Flanges

API Part Number	Size	O.D.	I.D.	Ø B.H.C.	Ø B.H.	# B.H.	THK	Weight Lbs
PF2200-063	22	29.50	22.19	27.25	1.38	20	0.63	48
PF2400-063	24	32.00	24.19	29.50	1.38	20	0.63	55
PF2600-063	26	34.25	26.19	31.75	1.38	24	0.63	63
PF2800-063	28	36.50	28.19	34.00	1.38	28	0.63	65
PF3000-063	30	38.75	30.19	36.00	1.38	28	0.63	77
PF3200-063	32	41.75	32.19	38.50	1.63	28	0.63	90
PF3400-063	34	43.75	34.19	40.50	1.63	32	0.63	93
PF3600-063	36	46.00	36.19	42.75	1.63	32	0.63	100
PF3800-063	38	48.75	38.19	45.25	1.63	32	0.63	117
PF4000-063	40	50.75	40.19	47.25	1.63	36	0.63	119
PF4200-063	42	53.00	42.19	49.50	1.63	36	0.63	130

Notes:

a. Flange material is steel (to AWWA C207 specifications). Specific grades of steel for structural or critical applications are available upon request.

b. Meets ASME/ANSI Class 150 bolt pattern.

ALL DIMENSIONS ARE IN INCHES UNLESS OTHERWISE STATED.

Exhaust Flanges

Domestic (AIS) & Import

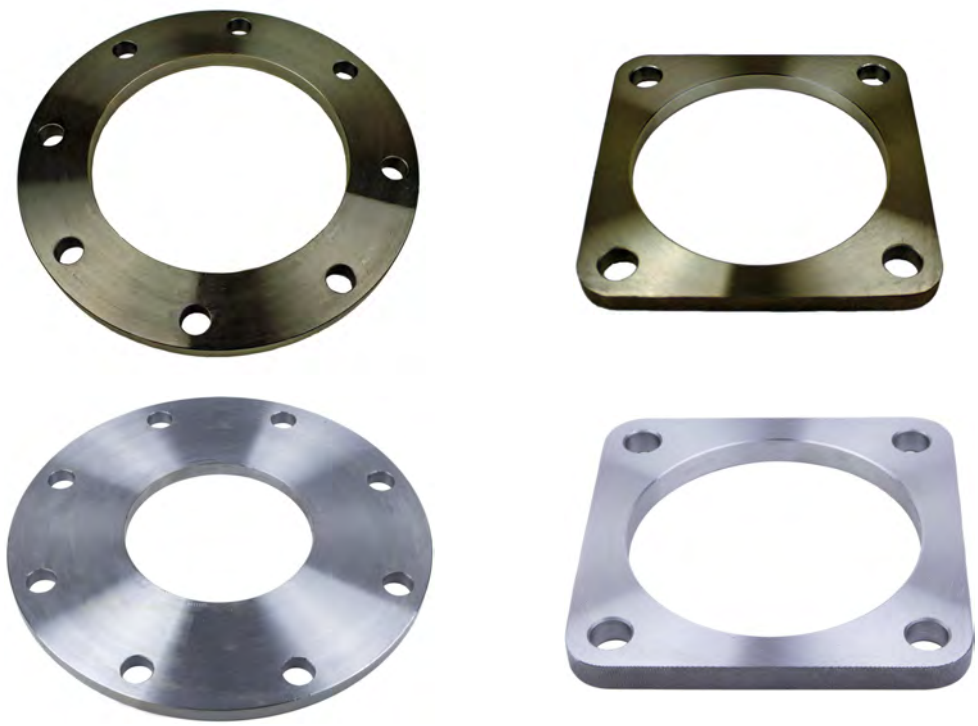

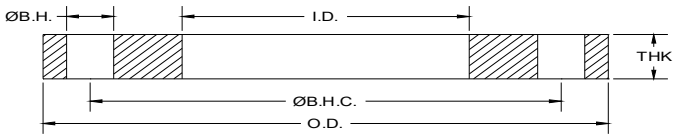



Round Exhaust Steel Flanges

API Part Number	Type	Size	O.D.	I.D.	Ø B.H.C.	Ø B.H.	# B.H.	THK	Weight Lbs
PFE0300	CAT	3	5.90	3.06	4.92	0.560	4	0.500	2.50
PFE0500	CAT	5	7.72	5.06	6.86	0.410	8	0.500	3.90
PFE0800	CAT	8	11.00	8.13	9.88	0.560	8	0.500	6.25
PFE1000	CAT	10	13.50	10.13	12.44	0.500	12	0.500	9.00
PFE1000-ULB	CAT	10	14.00	10.13	12.60	0.560	12	0.500	10.00
PFE1200	CAT	12	16.00	12.06	14.80	0.560	12	0.500	7.25
PFE1400	CAT	14	18.00	14.06	17.00	0.560	12	0.500	14.50
PFE1600	CAT	16	23.50	16.10	21.25	0.810	16	0.500	28.80
PFE1800	CAT	18	22.50	18.13	20.88	0.630	16	0.500	19.00
PFE0500C	CUMMINS	5	8.00	5.13	7.19	0.560	8	0.500	3.30
PFE0600C	CUMMINS	6	8.00	6.13	7.19	0.560	8	0.500	2.80
PFE0600C-43BH	CUMMINS	6	8.00	6.13	7.19	0.440	8	0.500	2.00
PFE0600D	DETROIT	6	9.50	6.06	8.19	0.440	6	0.500	6.00
PFE1000D	DETROIT	10	13.00	10.06	11.88	0.630	8	0.500	8.00
MIT0600	MITSUBISHI	6	9.00	6.00	8.19	0.430	6	0.500	5.00
MIT0800	MITSUBISHI	8	12.60	8.06	11.02	0.860	8	0.500	N/A
MIT1000	MITSUBISHI	10	15.16	10.00	13.56	0.870	12	0.500	N/A
MIT1200	MITSUBISHI	12	16.93	11.97	15.35	1.000	12	0.500	N/A
MIT1400	MITSUBISHI	14	18.90	14.06	17.13	1.000	12	0.500	N/A

Notes:

a. Steel material conforms to the requirements of AWWA C207 material specifications. Other material is available upon request.

b. Meets ASME/ANSI Class 150 bolt pattern.

ALL DIMENSIONS ARE IN INCHES UNLESS OTHERWISE STATED.

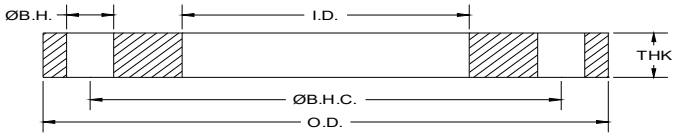

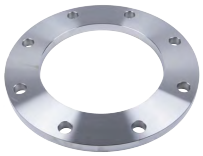

Round Exhaust Stainless Steel Flanges

API Part Number	Type	Size	O.D	I.D.	ø B.H.C	ø B.H	# B.H	THK	Weight lbs
SPFE0800	CAT	8	11.00	8.13	9.88	0.560	8	0.500	6.25
SPFE1200	CAT	12	16.00	12.06	14.80	0.560	12	0.500	7.25
SPFE1400	CAT	14	18.00	14.06	17.00	0.560	12	0.500	14.50
SPFE1800	CAT	18	22.50	18.13	20.88	0.630	16	0.500	19.00
SPFE2000	CAT	20	23.88	20.13	22.88	0.560	16	0.630	22.00
SPFE0600C	CUMMINS	6	8.00	6.13	7.19	0.560	8	0.500	2.80
SPFE1000D	DETROIT	10	13.00	10.06	11.88	0.630	8	0.500	8.00

Notes:

a. Flange material is stainless steel to AWWA C228 material specifications. Specific grades of steel for structural or critical applications are available upon request.

b. Meets ANSI Class 150 pattern

ALL DIMENSIONS ARE IN INCHES UNLESS OTHERWISE STATED.

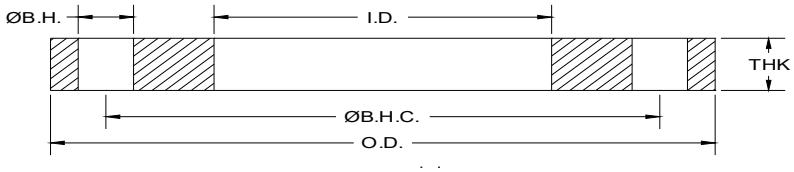



1/2" Thick Reducing Steel Flanges

API Part Number	Size	O.D.	I.D.	Ø B.H.C.	Ø B.H.	# B.H.	THK	Weight Lbs
PFHR0300-206	3 x 2	7.50	2.06	6.00	0.750	4	0.500	5.5
PFHR0400-306	4 x 3	9.00	3.06	7.50	0.750	8	0.500	8.0
PFHR0400-357	4 x 3	9.00	3.57	7.50	0.750	8	0.500	7.2
PFHR0500-306	5 x 3	10.00	3.06	8.50	0.875	8	0.500	9.5
PFHR0500-357	5 x 3	10.00	3.57	8.50	0.875	8	0.500	9.3
PFHR0500-406	5 x 4	10.00	4.06	8.50	0.875	8	0.500	8.8
PFHR0500-457	5 x 4	10.00	4.57	8.50	0.875	8	0.500	8.2
PFHR0600-406	6 x 4	11.00	4.06	9.50	0.875	8	0.500	12.0
PFHR0600-457	6 x 4	11.00	4.57	9.50	0.875	8	0.500	11.4
PFHR0600-506	6 x 5	11.00	5.06	9.50	0.875	8	0.500	10.8
PFHR0600-563	6 x 5	11.00	5.63	9.50	0.875	8	0.500	9.6
PFHR0800-406	8 x 4	13.50	4.06	11.75	0.875	8	0.500	17.7
PFHR0800-506	8 x 5	13.50	5.06	11.75	0.875	8	0.500	16.8
PFHR0800-563	8 x 5	13.50	5.63	11.75	0.875	8	0.500	16.1
PFHR0800-606	8 x 6	13.50	6.06	11.75	0.875	8	0.500	15.6
PFHR0800-672	8 x 6	13.50	6.72	11.75	0.875	8	0.500	14.7
PFHR1000-606	10 x 6	16.00	6.06	14.25	1.000	12	0.500	23.4
PFHR1000-672	10 x 6	16.00	6.72	14.25	1.000	12	0.500	26.0
PFHR1000-806	10 x 8	16.00	8.06	14.25	1.000	12	0.500	20.0
PFHR1000-872	10 x 8	16.00	8.72	14.25	1.000	12	0.500	19.3
PFHR1200-806	12 x 8	19.00	8.06	17.00	1.000	12	0.500	32.0
PFHR1200-1006	12 x 10	19.00	10.06	17.00	1.000	12	0.500	28.5
PFHR1200-1075	12 x 10	19.00	10.75	17.00	1.000	12	0.500	27.0
PFHR1200-1088	12 x 10	19.00	10.88	17.00	1.000	12	0.500	26.0
PFHR1400-806	14 x 8	21.00	8.06	18.75	1.125	12	0.500	40.1
PFHR1400-1006	14 x 10	21.00	10.06	18.75	1.125	12	0.500	36.1
PFHR1400-1206	14 x 12	21.00	12.06	18.75	1.125	12	0.500	32.0
PFHR1600-806	16 x 8	23.50	8.06	21.25	1.125	16	0.500	52.5
PFHR1600-1006	16 x 10	23.50	10.06	21.25	1.125	16	0.500	34.0
PFHR1600-1206	16 x 12	23.50	12.06	21.25	1.125	16	0.500	41.0
PFHR1600-1406	16 x 14	23.50	14.06	21.25	1.125	16	0.500	40.0
PFHR1800-1406	18 x 14	25.00	14.06	22.75	1.250	16	0.500	44.9
PFHR2000-1206	20 x 12	27.50	14.06	25.00	1.250	20	0.500	48.0
PFHR2200-2019	20x 22	29.50	20.19	27.25	1.380	20	0.500	48.5

Notes:

a. Steel material conforms to the requirements of AWWA C207 material specifications. Other material is available upon request.

b. Meets ASME/ANSI Class 150 bolt pattern.

ALL DIMENSIONS ARE IN INCHES UNLESS OTHERWISE STATED.

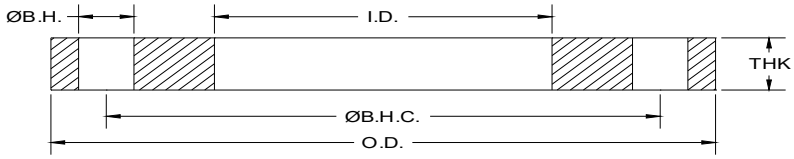



1/2" Thick Reducing Stainless Steel Flanges

API Part Number	Size	O.D.	I.D.	Ø B.H.C.	Ø B.H.	# B.H.	THK	Weight Lbs
SPFHR0500-406	5 x 4	10.00	4.06	8.50	0.88	8	0.500	9.0
SPFHR0600-406	6 x 4	11.00	4.06	9.50	0.88	8	0.500	11.0
SPFHR0600-506	6 x 5	11.00	5.06	9.50	0.88	8	0.500	10.5
SPFHR0800-506	8 x 5	13.50	5.06	11.75	0.88	8	0.500	18.0
SPFHR0800-606	8 x 6	13.50	6.06	11.75	0.88	8	0.500	16.5
SPFHR0800-672	8 x 6	13.50	6.72	11.75	0.88	8	0.500	15.0
SPFHR1000-606	10 x 6	16.00	6.06	14.25	1.00	12	0.500	18.0
SPFHR1000-806	10 x 8	16.00	8.06	14.25	1.00	12	0.500	20.0
SPFHR1200-1006	12 x 10	19.00	10.06	17.00	1.00	12	0.500	31.0
SPFHR1200-806	12 x 8	19.00	8.06	17.00	1.00	12	0.500	34.0
SPFHR1400-1288	14 x 12	21.00	12.88	18.75	1.13	12	0.500	28.0

Notes:

a. All Stainless Steel flanges available in Dual Grade 304/304L or 316/316L.

b. Meets ASME/ANSI Class 150 bolt pattern.

ALL DIMENSIONS ARE IN INCHES UNLESS OTHERWISE STATED.

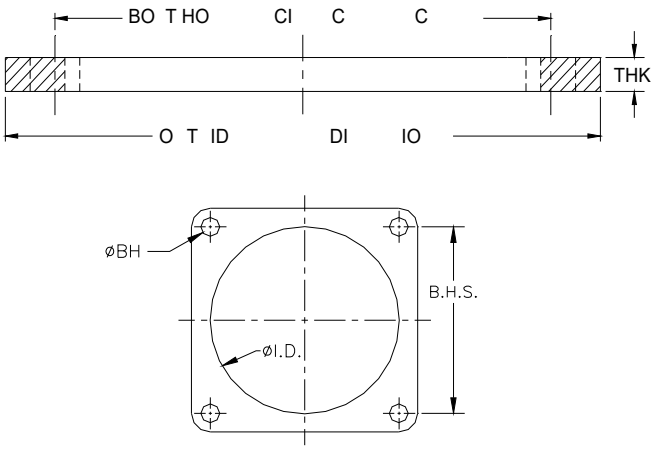



Square Exhaust Steel Flanges

API Part Number	Size	Outside Square	I.D.	Bolt Hole Spacing CTR-to-CTR	Ø B.H.	# B.H.	THK	Corner Radius	Weight Lbs
PFES0357	3	5.50 X 5.50	3.57	4.13	0.560	4	0.500	0.688	3.0
PFES0400	4	5.50 X 5.50	4.06	4.13	0.560	4	0.500	0.688	2.6
PFES0500	5	6.50 X 6.50	5.06	5.00	0.660	4	0.500	0.688	3.0
PFES0500-75BH	5	6.50 X 6.50	5.06	5.00	0.750	4	0.500	0.688	3.0
PFES0600	6	7.75 X 7.75	6.06	6.00	0.810	4	0.500	1.000	4.5

Notes:

a. Steel material conforms to the requirements of AWWA C207 material specifications.
Also available in 304/304L or 316/316L Stainless Steel.

ALL DIMENSIONS ARE IN INCHES UNLESS OTHERWISE STATED.

Notes

Backing Flanges & Stub Ends

Domestic (AIS) & Import







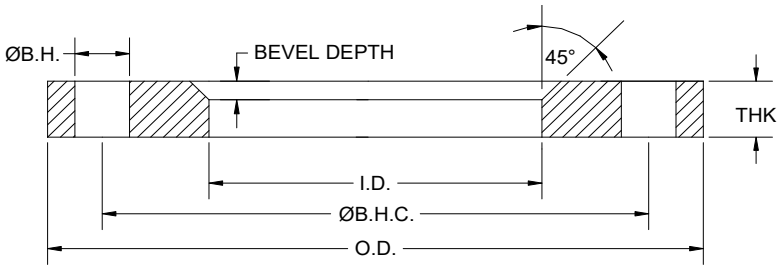



STAINLESS STEEL BACKING FLANGES FOR ANGLE FACE RINGS

API Part Number	Size	O.D.	I.D.	Ø B.H.C.	Ø B.H.	# B.H	THK	Bevel Depth	Weight lbs
SABF0050	0.5	3.50	1.25	2.38	0.630	4	0.500	0.250	0.9
SABF0075	0.75	3.88	1.44	2.75	0.630	4	0.500	0.250	1.1
SABF0100	1	4.25	1.69	3.13	0.630	4	0.500	0.250	1.3
SABF0125	1.25	4.63	2.06	3.50	0.630	4	0.500	0.250	1.5
SABF0150	1.5	5.00	2.25	3.88	0.630	4	0.500	0.250	1.9
SABF0200	2	6.00	2.88	4.75	0.750	4	0.500	0.250	2.5
SABF0250	2.5	7.00	3.38	5.50	0.750	4	0.500	0.250	3.5
SABF0300	3	7.50	4.00	6.00	0.750	4	0.500	0.250	4.0
SABF0400	4	9.00	5.00	7.50	0.750	8	0.562	0.250	6.0
SABF0500	5	10.00	6.06	8.50	0.875	8	0.500	0.250	6.5
SABF0600	6	11.00	7.25	9.50	0.875	8	0.630	0.250	8.0
SABF0800	8	13.50	9.25	11.75	0.875	8	0.630	0.250	11.5
SABF1000	10	16.00	11.44	14.25	1.000	12	0.630	0.312	15.0
SABF1200	12	19.00	13.63	17.00	1.000	12	0.630	0.312	26.0
SABF1400	14	21.00	14.88	18.75	1.125	12	0.630	0.312	26.5
SABF1600	16	23.50	16.88	21.25	1.125	16	0.750	0.312	37.0
SABF1800	18	25.00	18.88	22.75	1.250	16	0.880	0.375	42.0
SABF2000	20	27.50	20.88	25.00	1.250	20	0.880	0.375	51.0
SABF2400	24	32.00	24.88	29.50	1.375	20	1.000	0.375	76.0
SABF3000	30	38.75	30.88	36.00	1.375	28	1.000	0.500	104.0
SABF3600	36	46.00	36.88	42.75	1.625	32	1.250	0.500	166.0
SABF4200	42	53.00	42.91	49.50	1.625	36	1.250	0.500	220.0
SABF4800	48	59.50	48.91	56.00	1.625	44	1.250	0.500	262.0

Notes:

a. All Stainless Steel flanges available in Dual Grade 304/304L or 316/316L.
b. Meets ASME/ANSI Class 150 bolt pattern.

ALL DIMENSIONS ARE IN INCHES UNLESS OTHERWISE STATED.

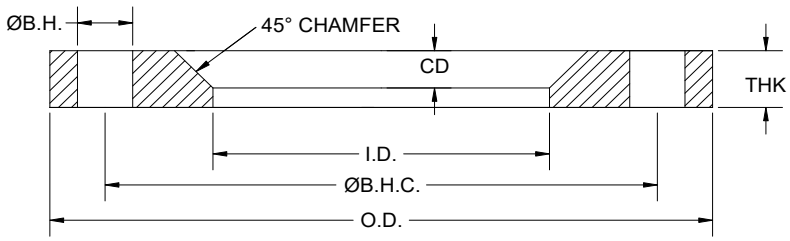



DUCTILE IRON BACKING FLANGES FOR STUB ENDS

API Part Number	Size	O.D.	I.D.	Ø B.H.C.	Ø B.H.	# B.H	THK	Bevel Depth	Weight lbs
(G)BF0050-DI	0.5	3.50	0.91	2.38	0.630	4	0.438	0.130	1.2
(G)BF0075-DI	0.75	3.88	1.11	2.75	0.630	4	0.500	0.130	1.3
(G)BF0100-DI	1	4.25	1.38	3.13	0.630	4	0.500	0.130	1.6
(G)BF0125-DI	1.25	4.63	1.72	3.50	0.630	4	0.500	0.190	1.9
(G)BF0150-DI	1.5	5.00	1.97	3.88	0.630	4	0.500	0.250	2.6
(G)BF0200-DI	2	6.00	2.46	4.75	0.750	4	0.500	0.320	2.7
(G)BF0250-DI	2.5	7.00	2.97	5.50	0.750	4	0.500	0.320	2.8
(G)BF0300-DI	3	7.50	3.60	6.00	0.750	4	0.500	0.380	4.5
(G)BF0400-DI	4	9.00	4.60	7.50	0.750	8	0.563	0.440	6.1
(G)BF0500-DI	5	10.00	5.69	8.50	0.875	8	0.630	0.440	7.2
(G)BF0600-DI	6	11.00	6.75	9.50	0.875	8	0.630	0.440	8.4
(G)BF0800-DI	8	13.50	8.75	11.75	0.875	8	0.630	0.440	12.8
(G)BF1000-DI	10	16.00	10.92	14.25	1.000	12	0.630	0.440	14.2
(G)BF1200-DI	12	19.00	12.92	17.00	1.000	12	0.750	0.440	26.8
(G)BF1400-DI	14	21.00	14.19	18.75	1.125	12	0.750	0.440	38.0
(G)BF1600-DI	16	23.50	16.19	21.25	1.125	16	0.750	0.440	39.0
(G)BF1800-DI	18	25.00	18.20	22.75	1.250	16	0.880	0.440	47.0
(G)BF2000-DI	20	27.50	20.25	25.00	1.250	20	0.880	0.440	57.0
(G)BF2400-DI	24	32.00	24.25	29.50	1.375	20	1.000	0.440	79.0
(G)BF3000-DI	30	38.75	30.38	36.00	1.375	28	1.000	0.440	117.0
(G)BF3600-DI	36	46.00	36.50	42.75	1.625	32	1.125	0.440	181.0

Notes:

a. Material conforms to ASTM A536.

b. Meets ASME/ANSI Class 150 bolt pattern.

c. Available with a paint or hot dip galvanized coating.

ALL DIMENSIONS ARE IN INCHES UNLESS OTHERWISE STATED.

Stub Ends

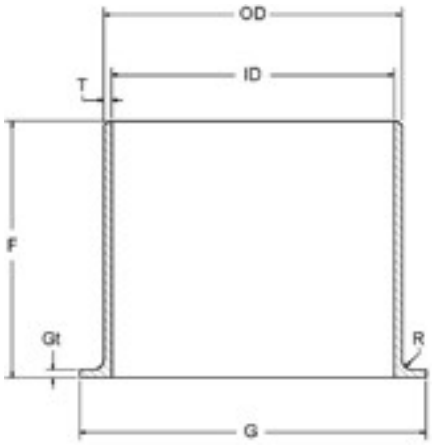

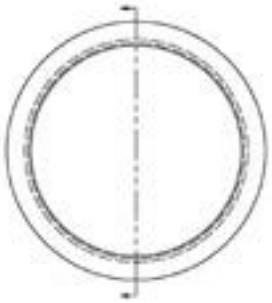



Size	Outside Diameter (O.D.)		Inside Diameter (I.D.)		Wall thickness (T)		Diameter (G)		Thickness (Gt)		Length (F)		Radius (R)	
	Std		Std		Std		Std		Std		Std			
	Min	Max	Min	Max	Min	Max	Min	Max	Min	Max	Min	Max	Min	Max
1	1.315		1.097		0.109		2.000		0.109		2		0.059	0.157
	1.283	1.346	1.067	1.126	0.098	0.122	1.969	2.031	0.098	0.165	1.941	2.059		
1.5	1.902		1.683		0.109		2.874		0.109		2			
	1.871	1.933	1.654	1.713	0.098	0.122	2.843	2.906	0.098	0.165	1.941	2.059		
2	2.374		2.156		0.109		3.626		0.109		2.5			
	2.343	2.421	2.126	2.201	0.098	0.122	3.594	3.657	0.098	0.165	2.441	2.559		
2.5	2.874		2.634		0.120		4.106		0.120		2.5			
	2.843	2.921	2.602	2.681	0.106	0.134	4.075	4.138	0.106	0.177	2.441	2.559		
3	3.500		3.260		0.120		5.000		0.122		2.5			
	3.469	3.547	3.197	3.323	0.106	0.134	4.969	5.031	0.106	0.177	2.441	2.559		
4	4.500		4.260		0.120		6.189		0.120		3			
	4.469	4.547	4.197	4.323	0.106	0.134	6.157	6.220	0.106	0.177	2.941	3.059		
5	5.563		5.295		0.134		7.315		0.134		3		0.079	0.197
	5.531	5.622	5.232	5.358	0.118	0.150	7.283	7.349	0.118	0.193	2.941	3.059		
6	6.626		6.358		0.134		8.500		0.134		3.5			
	6.594	6.685	6.295	6.421	0.118	0.150	8.469	8.531	0.118	0.193	3.441	3.559		
8	8.626		8.330		0.148		10.626		0.148		4			
	8.594	8.720	8.268	8.390	0.130	0.165	10.591	10.660	0.131	0.204	3.909	4.091		
10	10.752		10.422		0.1649		12.752		0.165		5			
	10.721	10.850	10.300	10.540	0.146	0.185	12.721	12.78	0.146	0.224	4.909	5.091		
12	12.752		12.392		0.180		15.000		0.180		6			
	12.721	12.850	12.271	12.510	0.157	0.201	14.971	15.030	0.157	0.236	5.909	6.091		

PART NUMBER STRUCTURE

Part Number Section	Options
Category	SE = Stub End
Size	XXXX = Size in inches going out 2 decimal places
Type	C = Type C
Schedule	10S = Schedule 10
Material	304L = 304L Stainless Steel
Example	SE0100-C-10S-304L = 1" Stub End, Type C, Schedule 10, 10, 304L Stainless Steel

Notes:

a. Product Specification For Lap Joint Type C MSS SP--43 Schedule 10S. Other Types, Schedules, and sizes available= upon request.

b. Standard material is 304L Stainless Steel, but available in= other materials on request.

ALL DIMENSIONS ARE IN INCHES UNLESS OTHERWISE STATED.

Miscellaneous Plate Flanges

Domestic (AIS) & Import





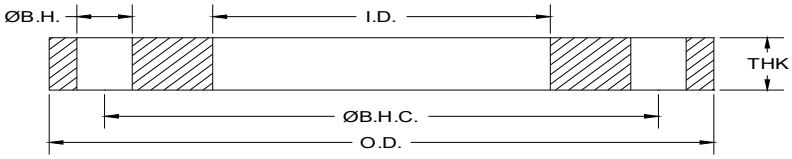



Class 150 Steel Slip-on Plate Flanges

API Part Number	Size	O.D.	I.D.	Ø B.H.C.	Ø B.H.	# B.H.	THK	Weight Lbs
PF0050	0.5	3.50	0.88	2.38	0.630	4	0.500	1.2
PF0075	0.75	3.88	1.09	2.75	0.630	4	0.500	1.5
PF0100	1	4.25	1.36	3.13	0.630	4	0.500	1.8
PF0125	1.25	4.63	1.70	3.50	0.630	4	0.500	1.9
PF0150	1.5	5.00	1.95	3.88	0.630	4	0.630	2.9
PF0200	2	6.00	2.44	4.75	0.750	4	0.630	4.1
PF0250	2.5	7.00	2.94	5.50	0.750	4	0.630	5.4
PF0300	3	7.50	3.57	6.00	0.750	4	0.630	5.9
PF0400	4	9.00	4.57	7.50	0.750	8	0.630	8.1
PF0500	5	10.00	5.66	8.50	0.875	8	0.750	10.4
PF0600	6	11.00	6.72	9.50	0.875	8	0.750	11.4
PF0800	8	13.50	8.72	11.75	0.875	8	1.000	22.0
PF1000	10	16.00	10.88	14.25	1.000	12	1.000	28.5
PF1200	12	19.00	12.88	17.00	1.000	12	1.000	41.5

Notes:

a. Steel material conforms to the requirements of AWWA C207 specifications. Other material is available upon request.

b. Meets ASME/ANSI Class 150 bolt pattern.

ALL DIMENSIONS ARE IN INCHES UNLESS OTHERWISE STATED.

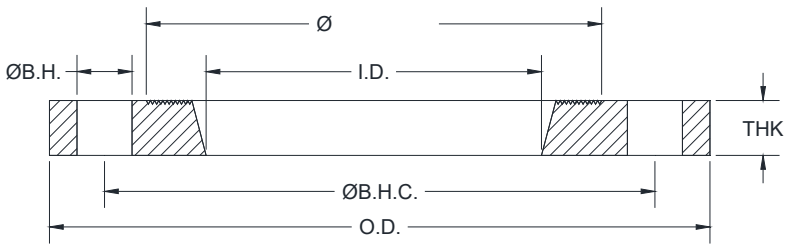



Butterfly Valve Adapter 4020 Flange

API Part Number	Size	O.D.	Ø Serrations	Ø B.H.C.	I.D.	# B.H.	Ø B.H.	THK
402032000	2	5.063	3.375	4.281	2.032	4	0.406	.469
402031000	3	5.750	4.250	4.906	3.032	6	0.438	.469
402028000	4	8.000	6.250	7.031	4.032	6	0.563	.469
402029000	5	8.500	7.000	7.563	5.032	6	0.563	.469
402030000	6	10.250	8.500	9.156	6.063	8	0.563	.469
402027000	8	13.500	11.750	11.750	8.032	8	0.750	.630
402036000	10	16.000	14.250	14.250	10.032	12	0.688	.630
402033000	12	19.000	17.000	17.000	12.000	12	1.000	.630

Notes:

a. Steel material conforms to the requirements of AWWA C207 specifications. Other material is available upon request.

ALL DIMENSIONS ARE IN INCHES UNLESS OTHERWISE STATED.

Notes

Rubber Expansion Joints & Accessories

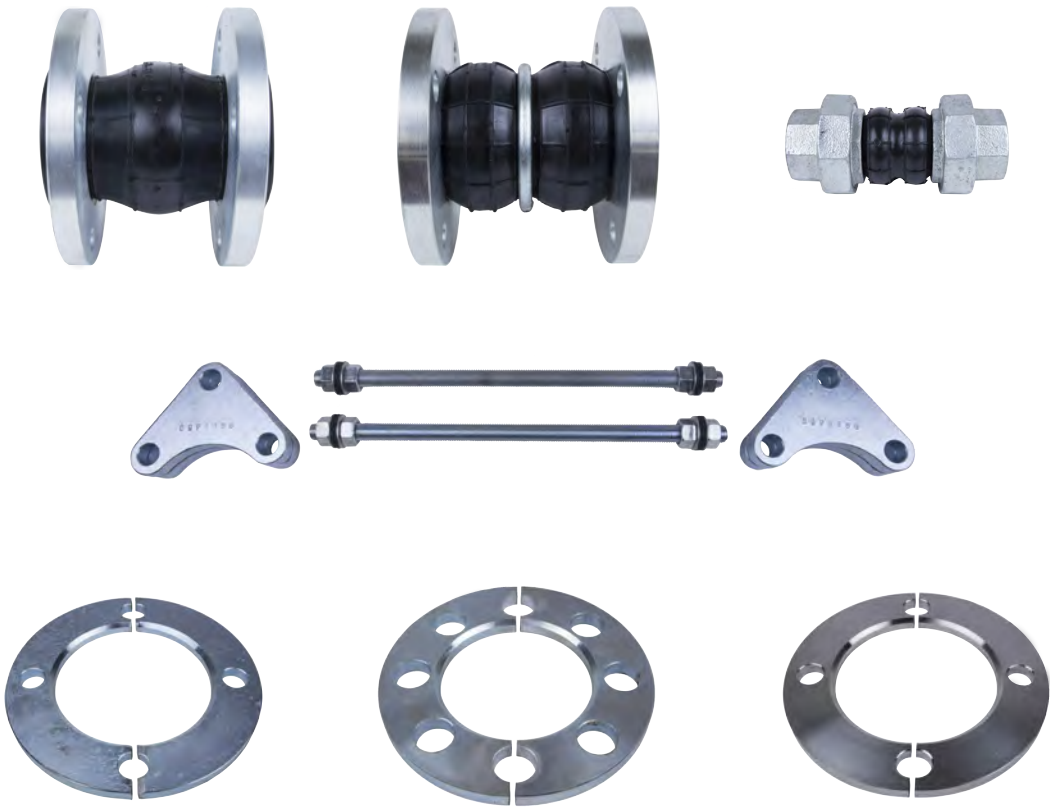

Rubber Expansion Joints - *Flange x Flange*
For Series: AMS, AMT, SAMS, & SAMT

PART NUMBER STRUCTURE

Part Number Section	Options
Type	AMS = Single Sphere (Steel) SAMS = Single Sphere (Stainless Steel) AMT = Twin Sphere (Steel) SAMT = Twin Sphere (Stainless Steel)
Size	XXXX = Size in inches going out 2 decimal places
Body Material	NE = Neoprene EP = EPDM BN = Buna-N/Nitrile/NBR
Flange Material	STL = Zinc Plated Steel 304L = 304L Stainless Steel 316L = 316L Stainless Steel
Class	150 = 150# Drilling 300 = 300# Drilling PXX = DIN PN10/PN16Drilling (available upon request)
Example	AJS0200-NE-STL-150 = Single Sphere Expansion Joint with Neoprene Body and Steel Flanges with 150# Drill Pattern

OPERATING CONDITIONS

Size Range	1" - 12"	14" - 24"
Operating Pressure*	up to 214 psi	up to 114 psi
Operating Temp Range*	14°F- 170°F (Neoprene) 14°F- 210°F (EPDM) 14°F- 170°F (Buna-N/Nitrile/NBR)	
Burst Pressure	853 psi	340 psi
Vacuum Rating*	Contact API Sales	

MATERIALS

Part	Part Description	Material
1	Flanges	Mild Steel - Zinc Plated steel or Stainless Steel
2	Reinforcing Wire	Mild Steel
3	Tube	Synthetic Rubber
4	Cover	Synthetic Rubber
5	Reinforcing Cord	Synthetic Fiber

"*" - Warnings:

a. **Pressure ratings listed in the above table are for temperatures up to 110°F. For temperature service above 125°F, please contact API Sales for actual working pressure ratings.**

b. Limit rods are required in systems that are unanchored and recommended in all other applications.

c. Not for use in steam applications

Single Sphere Rubber Expansion Joints - *Flange x Flange* (AMS & SAMS Series)



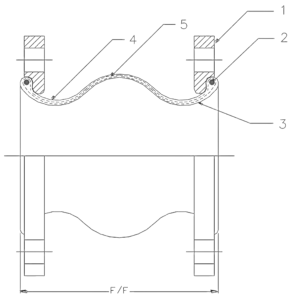

FEATURES

- Applicable for suction and delivery (discharge).
- Meets the requirements for low lead per NSF/ANSI 372
- Provides sound and vibration isolation.
- Gaskets and packing are not required.
- Floating flanges allow for easy installation.
- Prevents piping system and equipment breakdown by absorbing elongation and contraction caused by temperature variances.
- Absorbs water pulsation and minimizes water hammering.
- DIN drilled flanges available upon request.

APPLICATIONS

- Pumps & air compressors in air conditioning system & sanitary equipment.
- Refrigeration systems and blowers in industrial plant equipment.
- Feed-water and drainage equipment in marine piping systems.
- Applicable for use in power generation and chemical plants.

DIMENSION & ALLOWABLE MOVEMENTS

ALL DIMENSIONS ARE IN INCHES UNLESS OTHERWISE STATED.

API Part Number	Size	Face to Face Dimensions	Allowable Motion Ratings*				Installation Tolerances*			
			Compression	Elongation	Lateral	Angular	Compression	Elongation	Lateral	Angular
(S)AMS0100	1	6	0.50	0.38	0.50	15°	0.13	0.13	0.13	5°
(S)AMS0125	1.25	6	0.50	0.38	0.50	15°	0.13	0.13	0.13	5°
(S)AMS0150	1.5	6	0.50	0.38	0.50	15°	0.13	0.13	0.13	5°
(S)AMS0200	2	6	0.50	0.38	0.50	15°	0.13	0.13	0.13	5°
(S)AMS0250	2.5	6	0.50	0.38	0.50	15°	0.13	0.13	0.13	5°
(S)AMS0300	3	6	0.50	0.38	0.50	15°	0.13	0.13	0.13	5°
(S)AMS0400	4	6	0.63	0.38	0.50	15°	0.13	0.13	0.13	5°
(S)AMS0500	5	6	0.63	0.38	0.50	15°	0.13	0.13	0.13	5°
(S)AMS0600	6	6	0.63	0.38	0.50	15°	0.13	0.13	0.13	5°
(S)AMS0800	8	6	0.63	0.38	0.50	15°	0.13	0.13	0.13	5°
(S)AMS1000	10	8	0.63	0.50	0.75	15°	0.13	0.13	0.13	5°
(S)AMS1200	12	8	0.75	0.50	0.75	15°	0.13	0.13	0.13	5°
(S)AMS1400	14	8	0.75	0.50	0.75	15°	0.13	0.13	0.13	5°
(S)AMS1600	16	8	0.75	0.50	0.75	15°	0.13	0.13	0.13	5°
(S)AMS1800	18	8	0.75	0.50	0.75	15°	0.13	0.13	0.13	5°
(S)AMS2000	20	8	0.75	0.50	0.75	15°	0.13	0.13	0.13	5°
(S)AMS2400	24	10	0.75	0.50	0.75	15°	0.13	0.13	0.13	5°

Warning: Do not elongate rubber expansion joints when installing for suction service. "*" - Non Concurrent Ratings.

Notes:
a. For all expansion joint configurations - See section 10.02

Twin Sphere Rubber Expansion Joints - *Flange x Flange* (AMT & SAMT Series)

FEATURES

- Applicable for suction and delivery (discharge).
- Meets the requirements for low lead per NSF/ANSI 372
- Designed for greater compression, elongation, and angular movement than the single sphere expansion joint.
- Excellent for absorbing thermal expansion and eliminating sound and vibration.
- Gaskets and packing not required.
- Good electrical insulator.
- Absorbs water pulsation and minimizes water hammering.
- DIN drilled flanges available upon request.



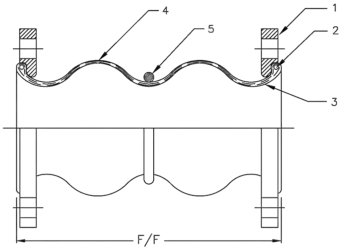

APPLICATIONS

- Pressure piping systems in building equipment and general industrial plants.
- Pump and turbine lines used for power generation plants, industrial machinery and universal pump blowers.
- Feed-water & drainage lines for waterworks & sanitary piping systems.
- Pipelines for industrial plants and shipbuilding yards.

DIMENSION & ALLOWABLE MOVEMENTS

ALL DIMENSIONS ARE IN INCHES UNLESS OTHERWISE STATED.

API Part Number	Size	Face to Face Dimensions	Allowable Motion Ratings*				Installation Tolerances*			
			Compression	Elongation	Lateral	Angular	Compression	Elongation	Lateral	Angular
(S)AMT0100	1	5.00	1.50	0.75	1.25	35°	0.13	0.13	0.13	10°
(S)AMT0125	1.25	7.00	1.50	0.75	1.25	35°	0.13	0.13	0.13	10°
(S)AMT0150	1.5	7.00	2.00	1.13	1.75	35°	0.13	0.13	0.13	10°
(S)AMT0200	2	7.00	2.00	1.13	1.75	35°	0.13	0.13	0.13	10°
(S)AMT0250	2.5	7.00	2.00	1.13	1.75	35°	0.13	0.13	0.13	10°
(S)AMT0300	3	7.00	2.00	1.38	1.75	35°	0.13	0.13	0.13	10°
(S)AMT0400	4	9.00	2.00	1.38	1.56	35°	0.13	0.13	0.13	10°
(S)AMT0500	5	9.00	2.00	1.38	1.56	30°	0.13	0.13	0.13	10°
(S)AMT0600	6	9.00	2.00	1.38	1.56	30°	0.13	0.13	0.13	10°
(S)AMT0800	8	13.00	2.38	1.38	1.38	30°	0.13	0.13	0.13	10°
(S)AMT1000	10	13.00	2.38	1.38	1.38	30°	0.13	0.13	0.13	10°
(S)AMT1200	12	13.00	2.38	1.38	1.38	20°	0.13	0.13	0.13	10°
(S)AMT1400	14	13.75	1.56	1.13	1.13	20°	0.13	0.13	0.13	10°
(S)AMT1600	16	13.75	1.56	1.13	1.13	20°	0.13	0.13	0.13	10°
(S)AMT1800	18	13.75	1.56	1.13	1.13	20°	0.13	0.13	0.13	10°
(S)AMT2000	20	13.75	1.56	1.13	1.13	20°	0.13	0.13	0.13	10°
(S)AMT2400	24	13.75	1.56	1.13	1.13	20°	0.13	0.13	0.13	10°

Warning: Do not elongate rubber expansion joints when installing for suction service.

"*" - Non Concurrent Ratings.

Notes:
a. For all expansion joint configurations - See section 10.02

Rubber Expansion Joints - *Flange x Flange*
For Series: AJS, AJT, SAJS, & SAJT

PART NUMBER STRUCTURE

Part Number Section	Options
Type	AJS = Single Sphere (Steel) SAJS = Single Sphere (Stainless Steel) AJT = Twin Sphere (Steel) SAJT = Twin Sphere (Stainless Steel)
Size	XXXX = Size in inches going out 2 decimal places
Body Material	NE = Neoprene EP = EPDM BN = Buna-N/Nitrile/NBR
Flange Material	STL = Zinc Plated Steel 304L = 304L Stainless Steel 316L = 316L Stainless Steel
Class	150 = 150# Drilling 300 = 300# Drilling PXX = DIN PN10/PN16Drilling (available upon request)
Example	AJS0200-NE-STL-150 = Single Sphere Expansion Joint with Neoprene Body and Steel Flanges with 150# Drill Pattern

OPERATING CONDITIONS

Size Range	1" - 12"	14" - 24"
Operating Pressure*	225 psi (up to 160°F)	150 psi (up to 160°F)
Burst Pressure	900 psi (at 70°F)	600 psi(at 70°F)
Vacuum Rating*	26 in/hg	15 in/hg
Operating Temp Range*	14°F- 180°F (Neoprene) 14°F- 210°F (EPDM) 14°F- 180°F (Buna-N/Nitrile/NBR)	

MATERIALS

Part	Part Description	Material
1	Flanges	Mild Steel - Zinc Plated steel or Stainless Steel
2	Reinforcing Wire	Mild Steel
3	Tube	Synthetic Rubber
4	Cover	Synthetic Rubber
5	Reinforcing Cord	Nylon

"*" - Warnings:

a. **Pressure ratings listed in the above table are for temperatures up to 160°F. For temperature service above 160°F, please contact API Sales for actual working pressure ratings.**

b. Limit rods are required in systems that are unanchored and recommended in all other applications.

c. Not for use in steam applications

Single Sphere Rubber Expansion Joints - *Flange x Flange* (AJS & SAJS Series)

FEATURES

- Applicable for suction and delivery (discharge).
- Meets the requirements for low lead per NSF/ANSI 372
- Provides sound and vibration isolation.
- Gaskets and packing are not required.
- Floating flanges allow for easy installation.
- Prevents piping system and equipment breakdown by absorbing elongation and contraction caused by temperature variances.
- Absorbs water pulsation and minimizes water hammering.
- DIN drilled flanges available upon request.
- Working pressure ratings based on 4:1 safety margin (at 70°F).



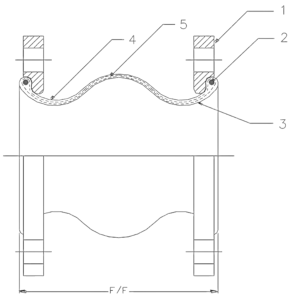

APPLICATIONS

- Pumps & air compressors in air conditioning system & sanitary equipment.
- Refrigeration systems and blowers in industrial plant equipment.
- Feed-water and drainage equipment in marine piping systems.
- Applicable for use in power generation and chemical plants.

DIMENSION & ALLOWABLE MOVEMENTS

ALL DIMENSIONS ARE IN INCHES UNLESS OTHERWISE STATED.

API Part Number	Size	Face to Face Dimensions	Allowable Motion Ratings*				Installation Tolerances*			
			Compression	Elongation	Lateral	Angular	Compression	Elongation	Lateral	Angular
(S)AJS0100	1	6	0.50	0.38	0.50	20°	0.13	0.13	0.13	5°
(S)AJS0125	1.25	6	0.50	0.38	0.50	20°	0.13	0.13	0.13	5°
(S)AJS0150	1.5	6	0.50	0.38	0.50	20°	0.13	0.13	0.13	5°
(S)AJS0200	2	6	0.50	0.38	0.50	20°	0.13	0.13	0.13	5°
(S)AJS0250	2.5	6	0.50	0.38	0.50	15°	0.13	0.13	0.13	5°
(S)AJS0300	3	6	0.50	0.38	0.50	15°	0.13	0.13	0.13	5°
(S)AJS0400	4	6	0.63	0.38	0.50	15°	0.13	0.13	0.13	5°
(S)AJS0500	5	6	0.63	0.38	0.50	15°	0.13	0.13	0.13	5°
(S)AJS0600	6	6	0.63	0.38	0.50	15°	0.13	0.13	0.13	5°
(S)AJS0800	8	6	0.63	0.38	0.50	15°	0.13	0.13	0.13	5°
(S)AJS1000	10	8	0.75	0.50	0.75	15°	0.13	0.13	0.13	5°
(S)AJS1200	12	8	0.75	0.50	0.75	15°	0.13	0.13	0.13	5°
(S)AJS1400	14	8	1.00	0.63	0.75	15°	0.13	0.13	0.13	5°
(S)AJS1600	16	8	1.00	0.63	0.75	15°	0.13	0.13	0.13	5°
(S)AJS1800	18	8	1.00	0.63	0.75	15°	0.13	0.13	0.13	5°
(S)AJS2000	20	8	1.00	0.63	0.75	15°	0.13	0.13	0.13	5°
(S)AJS2400	24	10	1.00	0.63	0.75	15°	0.13	0.13	0.13	5°

Warning: Do not elongate rubber expansion joints when installing for suction service. "*" - Non Concurrent Ratings.

Notes:
a. For all expansion joint configurations - See section 10.05

Twin Sphere Rubber Expansion Joints - *Flange x Flange* (AJT & SAJT Series)

FEATURES

- Applicable for suction and delivery (discharge).
- Meets the requirements for low lead per NSF/ANSI 372
- Designed for greater compression, elongation, and angular movement than the single sphere expansion joint.
- Excellent for absorbing thermal expansion and eliminating sound and vibration.
- Gaskets and packing not required.
- Good electrical insulator.
- Absorbs water pulsation and minimizes water hammering.
- DIN drilled flanges available upon request.
- Working pressure ratings based on 4:1 safety margin (at 70°F).



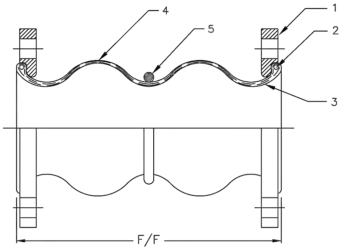

APPLICATIONS

- Pressure piping systems in building equipment and general industrial plants.
- Pump and turbine lines used for power generation plants, industrial machinery and universal pump blowers.
- Feed-water & drainage lines for waterworks & sanitary piping systems.
- Pipelines for industrial plants and shipbuilding yards.

DIMENSION & ALLOWABLE MOVEMENTS

ALL DIMENSIONS ARE IN INCHES UNLESS OTHERWISE STATED.

API Part Number	Size	Face to Face Dimension	Allowable Motion Ratings**				Installation Tolerances*			
			Compression	Elongation	Lateral	Angular	Compression	Elongation	Lateral	Angular
(S)AJT0100*	1	5.00	2.00	1.00	1.75	35°	0.13	0.13	0.13	10°
(S)AJT0125*	1.25	7.00	2.00	1.00	1.75	35°	0.13	0.13	0.13	10°
(S)AJT0150*	1.5	7.00	2.00	1.00	1.75	35°	0.13	0.13	0.13	10°
(S)AJT0200*	2	7.00	2.00	1.00	1.75	35°	0.13	0.13	0.13	10°
(S)AJT0250	2.5	7.00	2.00	1.00	1.75	35°	0.13	0.13	0.13	10°
(S)AJT0300	3	7.00	2.00	1.00	1.75	35°	0.13	0.13	0.13	10°
(S)AJT0400	4	9.00	2.00	1.38	1.56	35°	0.13	0.13	0.13	10°
(S)AJT0500	5	9.00	2.00	1.38	1.56	30°	0.13	0.13	0.13	10°
(S)AJT0600	6	9.00	2.38	1.38	1.56	30°	0.13	0.13	0.13	10°
(S)AJT0800	8	13.00	2.38	1.50	1.38	30°	0.13	0.13	0.13	10°
(S)AJT1000	10	13.00	2.38	1.50	1.38	30°	0.13	0.13	0.13	10°
(S)AJT1200	12	13.00	2.38	1.50	1.38	20°	0.13	0.13	0.13	10°
(S)AJT1400	14	13.75	2.38	1.50	1.13	20°	0.13	0.13	0.13	10°
(S)AJT1600	16	13.75	2.38	1.50	1.13	20°	0.13	0.13	0.13	10°
(S)AJT1800	18	13.75	2.38	1.50	1.13	20°	0.13	0.13	0.13	10°
(S)AJT2000	20	13.75	2.38	1.50	1.13	20°	0.13	0.13	0.13	10°
(S)AJT2400	24	13.75	2.38	1.50	1.13	20°	0.13	0.13	0.13	10°

Warning: Do not elongate rubber expansion joints when installing for suction service.

"*"- Sizes ≤ 2" do not have root rings.

"**"- Non Concurrent Ratings.

Notes:
a. For all expansion joint configurations - See section 10.05

Twin Sphere Rubber Expansion Joints - *Union x Union* (AMU Series)



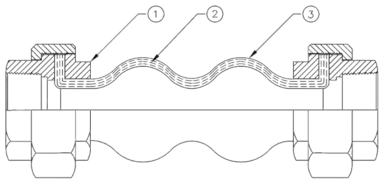

FEATURES

- Efficient noise and vibration isolation.
- Ability to absorb large displacement due to eccentric, axial, and angular movement.
- Applicable for both suction and discharge.
- Female Threaded Unions allow for easy installation.

APPLICATIONS

- Vibration isolation for small pumps and circular pumps.
- Sewage disposal purifier line.
- Vibration isolation for air-conditioners and pipes.

DIMENSION & ALLOWABLE MOVEMENTS

ALL DIMENSIONS ARE IN INCHES UNLESS OTHERWISE STATED.

API Part Number	Size	Face to Face dimension (L)	AllowabLe Motion Ratings*				Approximate Weight (lbs)
			Compression	Elongation	Lateral	Angular	
AMU0050-XX	0.5	8.00	0.88	0.25	0.88	45°	1.5
AMU0075-XX	0.75	8.00	0.88	0.25	0.88	45°	1.8
AMU0100-XX	1	8.00	0.88	0.25	0.88	45°	2.8
AMU0125-XX	1.25	8.00	0.88	0.25	0.88	45°	3.5
AMU0150-XX	1.5	8.00	0.88	0.25	0.88	45°	4.0
AMU0200-XX	2	8.00	0.88	0.25	0.88	45°	5.0

Warning: Do not elongate rubber expansion joints when installing for suction service.

"*" - Non Concurrent Ratings.

PART NUMBER STRUCTURE

Part Number Section	Options
Type	AMU = Twin Sphere Union Expansion Joint
Size	XXXX = Size in inches going out 2 decimal places
Body Material *Denoted with "XX"*	EP = EPDM NE = Neoprene

OPERATING CONDITIONS

Operating Pressure	up to 150 psi
Normal Operating Temp.	14° - 158° F
Vacuum Rating	25" Hg
Burst Pressure	750 psi

MATERIALS

Part	Part Description	Material
1	Threaded Union	Malleable Iron (Hot Dipped Galv.)
2	Reinforcing Cloth	Nylon Fabric
3	Elastomer	EPDM

"*" - Warning:

Pressure ratings listed in the above table are for up to 110° F (for Neoprene), and 125° F (for EPDM).

For elevated temperature service, please contact API Sales for actual working pressure ratings.

Twin Sphere Rubber Expansion Joints - *Union x Union* (AJU Series)



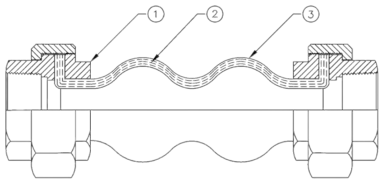

FEATURES

- Efficient noise and vibration isolation.
- Ability to absorb large displacement due to eccentric, axial, and angular movement.
- Applicable for both suction and discharge.
- Female Threaded Unions allow for easy installation.

APPLICATIONS

- Vibration isolation for small pumps and circular pumps.
- Sewage disposal purifier line.
- Vibration isolation for air-conditioners and pipes.

DIMENSION & ALLOWABLE MOVEMENTS

ALL DIMENSIONS ARE IN INCHES UNLESS OTHERWISE STATED.

API Part Number	Size	Face to Face dimension (L)	Allowable Motion Ratings*				Approximate Weight (lbs)
			Compression	Elongation	Lateral	Angular	
AJU0050-XX	0.5	8.00	0.87	0.23	0.87	40°	0.99
AJU0075-XX	0.75	8.00	0.87	0.23	0.87	40°	1.39
AJU0100-XX	1	8.00	0.87	0.23	0.87	40°	2.35
AJU0125-XX	1.25	8.00	0.87	0.23	0.87	40°	2.68
AJU0150-XX	1.5	8.00	0.87	0.23	0.87	40°	4.09
AJU0200-XX	2	8.00	0.87	0.23	0.87	40°	5.39
AJU0250-XX	2.5	9.60	0.87	0.23	0.87	40°	7.90
AJU0300-XX	3	9.60	0.87	0.23	0.87	40°	9.90

Warning: Do not elongate rubber expansion joints when installing for suction service.

"*" - Non Concurrent Ratings.

PART NUMBER STRUCTURE

Part Number Section	Options
Type	AJU = Twin Sphere Union Expansion Joint
Size	XXXX = Size in inches going out 2 decimal places
Body Material *Denoted with "XX"*	EP = EPDM NE = Neoprene

OPERATING CONDITIONS

Operating Pressure	up to 150 psi
Normal Operating Temp.**	14°- 160° F
Vacuum Rating	26" Hg
Burst Pressure	700 psi

MATERIALS

Part	Part Description	Material
1	Threaded Union	Malleable Iron (Hot Dipped Galv.)
2	Reinforcing Cloth	Nylon Fabric
3	Elastomer	Synthetic Rubber

"**" - Warning:
Pressure ratings listed in the above table are for temperatures up to 160°F. For temperature service above 160°F, please contact API Sales for actual working pressure ratings.

Control Units - Mild Steel (Zinc Plated) or 304/316 SS

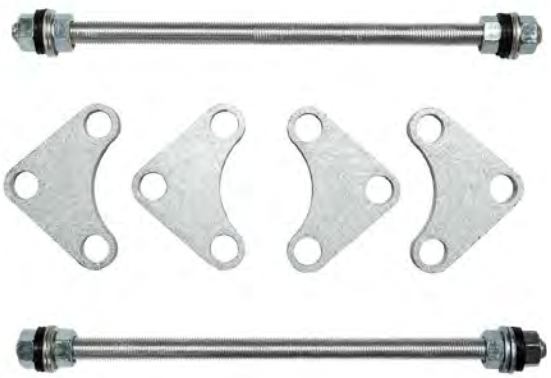

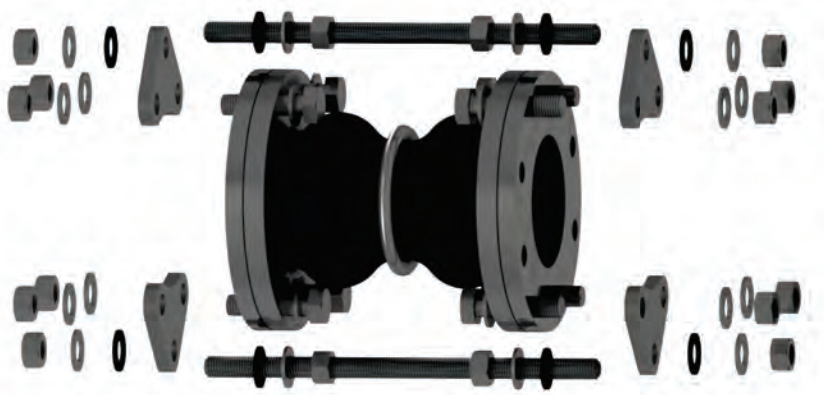

ALL DIMENSIONS ARE IN INCHES UNLESS OTHERWISE STATED.

Complete unit* API Part Number	Size	Expansion Joint Application	Gusset Plate Part Number	Plate THK.	Plate Weight (lbs)	Control ROD Part Number**	Approximate Weight (lbs)
CRU0150	1.5	SINGLE/TWIN	CRP0150	0.50	0.8	CR0625-14S	6.4
CRU0200	2	SINGLE/TWIN	CRP0200	0.50	1.0	CR0625-14S	7.2
CRU0250	2.5	SINGLE/TWIN	CRP0250	0.50	1.3	CR0625-14S	8.4
CRU0300	3	SINGLE/TWIN	CRP0300	0.50	1.6	CR0625-14S	9.6
CRUS0400	4	SINGLE	CRP0400	0.50	1.4	CR0625-14S	8.8
CRUT0400	4	TWIN	CRP0400	0.50	1.4	CR0625-17T	9.2
CRUS0500	5	SINGLE	CRP0500	0.50	1.5	CR0625-14S	9.2
CRUT0500	5	TWIN	CRP0500	0.50	1.5	CR0625-17T	9.6
CRUS0600	6	SINGLE	CRP0600	0.50	1.7	CR0625-14S	10.0
CRUT0600	6	TWIN	CRP0600	0.50	1.7	CR0625-17T	10.4
CRUS0800	8	SINGLE	CRP0800	0.50	2.1	CR0875-18S	16.4
CRUT0800	8	TWIN	CRP0800	0.50	2.1	CR0875-23T	17.6
CRUS1000	10	SINGLE	CRP1000	0.75	3.5	CR0875-18S	22.0
CRUT1000	10	TWIN	CRP1000	0.75	3.5	CR0875-23T	23.2
CRUS1200	12	SINGLE	CRP1200	0.75	5.0	CR1125-18S	34.0
CRUT1200	12	TWIN	CRP1200	0.75	5.0	CR1125-23T	36.0
CRUS1400	14	SINGLE	CRP1416	0.75	5.0	CR1125-18S	34.0
CRUT1400	14	TWIN	CRP1416	0.75	5.0	CR1125-23T	36.0
CRUS1600	16	SINGLE	CRP1416	0.75	5.0	CR1125-18S	34.0
CRUT1600	16	TWIN	CRP1416	0.75	5.0	CR1125-23T	36.0
CRUS1800	18	SINGLE	CRP1820	0.75	6.0	CR1125-18S	38.0
CRUT1800	18	TWIN	CRP1820	0.75	6.0	CR1125-23T	40.0
CRUS2000	20	SINGLE	CRP1820	0.75	6.0	CR1125-18S	38.0
CRUT2000	20	TWIN	CRP1820	0.75	6.0	CR1125-23T	40.0
CRUS2400	24	SINGLE	CRP2400	1.00	7.5	CR1250-18S	47.0
CRUT2400	24	TWIN	CRP2400	1.00	7.5	CR1250-23T	49.0

Warning: Do not elongate expansion joints when installing for suction service.

"*" - Complete units consist of the following: 2 Rods; 4 Plates; 8 Nuts; 8 Steel Washers; & 8 Neoprene Washers. If needed, 3 or more rod sets are available upon request.

"**" - Single (S); Twin (T).

NOTES:

a. Available in ANSI Class 150 and 300 drilling pattern.
b. Available in plated mild steel, 304, and 316 stainless steel.

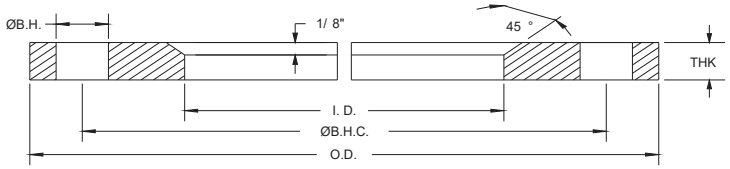



Split Retaining Rings - Class 150 Drill Pattern

API Part Number	Size	O.D.	I.D.	Ø B.H.C.	Ø B.H	# B.H	THK	Set Weight (lbs.)
(S)RR0050	0.5	3.50	1.50	2.38	0.630	4	0.375	1.57
(S)RR0075	0.75	3.88	1.88	2.75	0.630	4	0.375	1.85
(S)RR0100	1	4.25	2.38	3.13	0.630	4	0.375	2.02
(S)RR0125	1.25	4.63	2.63	3.50	0.630	4	0.375	2.41
(S)RR0150	1.5	5.00	2.88	3.88	0.630	4	0.375	2.82
(S)RR0200	2	6.00	3.63	4.75	0.750	4	0.375	3.83
(S)RR0250	2.5	7.00	4.13	5.50	0.750	4	0.375	5.53
(S)RR0300	3	7.50	4.63	6.00	0.750	4	0.375	6.06
(S)RR0400	4	9.00	5.88	7.50	0.750	8	0.375	7.81
(S)RR0500	5	10.00	6.88	8.50	0.880	8	0.375	8.65
(S)RR0600	6	11.00	7.88	9.50	0.880	8	0.375	9.81
(S)RR0800	8	13.50	9.88	11.75	0.880	8	0.375	14.60
(S)RR1000	10	16.00	12.13	14.25	1.000	12	0.375	18.03
(S)RR1200	12	19.00	14.50	17.00	1.000	12	0.375	25.83
(S)RR1400	14	21.00	16.50	18.75	1.130	12	0.375	28.56
(S)RR1600	16	23.50	18.50	21.25	1.130	16	0.375	35.29
(S)RR1800	18	25.00	20.50	22.75	1.250	16	0.375	33.46
(S)RR2000	20	27.50	22.63	25.00	1.250	20	0.375	39.63
(S)RR2200	22	29.50	24.63	27.25	1.380	20	0.375	41.98
(S)RR2400	24	32.00	26.63	29.50	1.380	20	0.375	51.51
(S)RR2600	26	34.25	28.88	31.75	1.380	24	0.375	54.60
(S)RR2800	28	36.50	30.88	34.00	1.380	28	0.375	60.56
(S)RR3000	30	38.75	32.88	36.00	1.380	28	0.375	68.34
(S)RR3200	32	41.75	34.88	38.50	1.630	28	0.375	84.14
(S)RR3400	34	43.75	37.00	40.50	1.630	32	0.375	85.63
(S)RR3600	36	46.00	39.00	42.75	1.630	32	0.375	94.93
(S)RR4000	40	50.75	43.00	47.25	1.630	36	0.375	117.44
(S)RR4200	42	53.00	45.25	49.50	1.630	36	0.375	123.93
(S)RR4400	44	55.25	47.25	51.75	1.630	40	0.375	132.85
(S)RR4800	48	59.50	51.25	56.00	1.630	44	0.375	148.31
(S)RR5000	50	61.75	53.25	58.25	1.880	44	0.375	153.01
(S)RR5200	52	64.00	55.25	60.50	1.880	44	0.375	165.28
(S)RR5400	54	66.25	57.25	62.75	2.000	44	0.375	177.95

1 Set = 4 Split Ring Halves (thru 28")
8 Split Ring Quarters (for 30" and larger)

Notes:

a. Available in Silver Zinc Plated Steel, Straight Grade 304 Stainless Steel, and Dual Grade 316/316L Stainless Steel.

b. Navy or DIN drilling available on special order basis.

ALL DIMENSIONS ARE IN INCHES UNLESS OTHERWISE STATED.

PART NUMBER STRUCTURE

Part Number Section	Options
Type	RR = Zinc Plated Steel SRR = Stainless Steel
Size	XXXX = Size in inches going out 2 decimal places
Material	4= Standard Grade 304 Stainless Steel 16L = Dual Grade 316/316L Stainless Steel
Other	S = Set
Example	SRR2000-16L-S

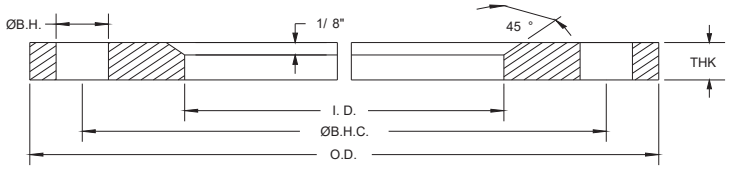



Split Retaining Rings - Class 300 Drill Pattern (Zinc Plated Steel)

API Part Number	Size	O.D.	I.D.	Ø B.H.C.	Ø B.H.	# B.H	THK	Set Weight (lbs.)
RR0100-30	1	4.88	2.38	3.50	0.750	4	0.375	2.69
RR0125-30	1.25	5.20	2.63	3.88	0.750	4	0.375	3.00
RR0150-30	1.5	6.13	2.88	4.50	0.880	4	0.375	4.43
RR0200-30	2	6.50	3.63	5.00	0.880	8	0.375	3.80
RR0250-30	2.5	7.50	4.13	5.88	0.880	8	0.375	5.48
RR0300-30	3	8.25	4.63	6.63	0.880	8	0.375	6.71
RR0400-30	4	10.00	5.88	7.88	0.880	8	0.375	9.83
RR0500-30	5	11.00	6.88	9.25	0.880	8	0.375	11.20
RR0600-30	6	12.50	7.88	10.63	0.880	12	0.375	14.09
RR0800-30	8	15.00	9.88	13.00	1.000	12	0.375	19.15
RR1000-30	10	17.50	12.13	15.25	1.130	16	0.375	23.02
RR1200-30	12	20.50	14.50	17.75	1.250	16	0.375	30.71
RR1400-30	14	23.00	16.50	20.25	1.250	20	0.375	37.43
RR1600-30	16	25.50	18.50	22.50	1.250	20	0.375	45.94
RR1800-30	18	28.00	20.50	24.75	1.250	24	0.375	54.15
RR2000-30	20	30.50	22.63	27.00	1.250	24	0.375	63.18
RR2400-30	24	36.00	26.63	32.00	1.500	24	0.375	88.45

1 Set = 4 Split Ring Halves.

Notes:

a. Available in Silver Zinc Plated Steel,
Straight Grade 304 Stainless Steel, and
Dual Grade 316/316L Stainless Steel.

b. Navy or DIN drilling available on special order basis.

ALL DIMENSIONS ARE IN INCHES UNLESS OTHERWISE STATED.

Pump Connectors





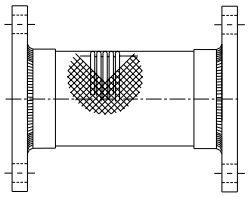



Stainless Steel Braided - Flanged Pump Connectors

API Part Number	Size	Overall Length	Operating Pressure (PSI) At 70° F.	Operating Pressure (PSI) At 250° F.	Flange Thickness	Approx. Weight (lbs)
PCF0200-SSB	2	9.0	300	276	0.625	11.0
PCF0250-SSB	2.5	9.0	350	322	0.625	14.0
PCF0300-SSB	3	9.0	300	276	0.625	15.0
PCF0400-SSB	4	9.0	250	230	0.625	20.0
PCF0500-SSB	5	11.0	175	161	0.750	28.0
PCF0600-SSB	6	11.0	165	152	0.750	33.0
PCF0800-SSB	8	12.0	150	138	1.000	51.0
PCF0800-SBB	8	12.0	174	160	1.000	52.0
PCF1000-SSB	10	13.0	140	129	1.000	73.0
PCF1000-SBB	10	13.0	180	165	1.000	74.0
PCF1200-SSB	12	14.0	130	119	1.000	100.0
PCF1400-SSB	14	14.0	125	115	1.000	108.0

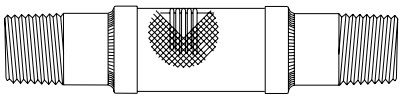



Stainless Steel Braided - Threaded Pump Connectors

API Part Number	Size	Overall Length	Operating Pressure (PSI) At 70° F.	Operating Pressure (PSI) At 250° F.	Approx. Weight (Lbs)
PCT0050-SSB	0.5	6.5	825	760	0.5
PCT0075-SSB	0.75	7.0	487	448	0.8
PCT0100-SSB	1	8.0	475	437	1.0
PCT0125-SSB	1.25	8.5	425	391	1.5
PCT0150-SSB	1.5	9.0	425	391	2.0
PCT0200-SSB	2	10.5	300	276	2.5
PCT0250-SSB	2.5	12.0	350	322	3.0
PCT0300-SSB	3	14.0	300	276	5.0
PCT0400-SSB	4	16.0	250	230	8.0

Notes:

a. Pump Connectors are designed to absorb pump vibration, plus 1/8" misalignment.

b. Working pressures are based on simple pump vibration in a static installation and may vary based on specific application.

c. Threads on PCT series Pump Connectors are Male x Male NPT.

d. For elevated temperature service (above 250°F.) please contact API Sales for actual working pressure ratings.

e. All flanged Pump Connectors have a 150# drilling pattern.

PART NUMBER STRUCTURE

Part Number Section	Options
Type	PCF = Flanged Pump Connector PCT = Threaded Pump Connector
Size	XXXX = Size in inches going out 2 decimal places
Braid Type	SSB = Single Standard Braid SBB = Single Braided Braid

Part	Material
Hose	300 Series Stainless Steel
Braid	300 Series Stainless Steel
Collar	300 Series Stainless Steel
Flange or Threaded End	Mild Steel

ALL DIMENSIONS ARE IN INCHES UNLESS OTHERWISE STATED.

DC# 0925

KLAMPz®

Grooved Piping System



KLAMPz®

Grooved Piping System

UL LISTED FM APPROVED

AVAILABLE IN:
- UL/FM APPROVED
- NON-UL/FM VERSIONS

Quick Reference Part Number

#K05 lt Weight Flexible Coupling			#K10 90 Degree Elbow			#K11 45 Degree Elbow			#K20 Straight Tee		
SHURJOINT	ANVIL	VICTAULIC	SHURJOINT	ANVIL	VICTAULIC	SHURJOINT	ANVIL	VICTAULIC	SHURJOINT	ANVIL	VICTAULIC
											
7705	C3	75	7110	7050	10	7111	7051	11	7120	7060	20

#K41 Flange Adapter			#K58 Adapter Nipples			#SK58 Adapter Nipples			#K60 Cap		
SHURJOINT	ANVIL	VICTAULIC	SHURJOINT	ANVIL	VICTAULIC	SHURJOINT	ANVIL	VICTAULIC	SHURJOINT	ANVIL	VICTAULIC
											
7141	7012	741	58	7082	42	7160	7074	60	7160	7074	60

#KTB ASTM A183 Track Head Bolts			#KGE EPDM Gaskets		
SHURJOINT	ANVIL	VICTAULIC	SHURJOINT	ANVIL	VICTAULIC
					

KLAMPz®

Grooved Piping System

KLAMPz On... Stayz On!

PIPE SIZE		PIPE SCHEDULE													
NOMINAL (in)	OD (in)	5	10	20	30	40	STD	60	80	XH	100	120	140	160	XXH
0.125	0.405	.035 .14	.049 .19			.068 .24	.068 .24		.095 .31	.095 .31					
0.25	0.504	.049 .26	.065 .33			.088 .43	.088 .43		.119 .54	.119 .54					
0.375	0.675	.049 .33	.065 .42			.091 .57	.091 .57		.126 .74	.126 .74					
0.5	0.840	.065 .54	.083 .67			.109 .85	.109 .85		.147 1.09	.147 1.09				.187 1.31	.294 1.72
0.75	1.050	.065 .68	.083 .86			.113 1.13	.113 1.13		.154 1.48	.154 1.48				.218 1.94	.308 2.44
1	1.315	.065 .87	.109 1.41			.133 1.68	.133 1.68		.179 2.17	.179 2.17				.250 2.85	.358 3.66
1.25	1.660	.065 1.11	.109 1.81			.140 2.27	.140 2.27		.191 3.00	.191 3.00				.250 3.77	.382 5.22
1.5	1.900	.065 1.27	.109 2.09			.145 2.72	.145 2.72		.200 3.63	2.00 3.63				.281 4.86	.400 6.41
2	2.375	.065 1.60	.109 2.64			.154 3.66	.154 3.66		.218 5.03	.218 5.03				.344 7.45	.436 9.04
2.5	2.875	.083 2.48	.120 3.53			.203 5.80	.203 5.80		.276 7.67	.276 7.67				.375 10.02	.552 13.71
3	3.50	.083 3.03	.120 4.34			.216 7.58	.216 7.58		.300 10.26	.300 10.26				.438 14.31	0.600 18.60
3.5	4.00	.083 3.48	.120 4.98			.226 9.12	.226 9.12		.318 12.52	.318 12.52					.636 22.87
4	4.50	.083 3.92	.120 5.62			.237 10.80	.237 10.80		.337 15.00	.337 15.00		4.38 19.02		.531 22.53	.674 27.57
5	5.56	.109 6.63	.134 7.78			.258 14.63	.258 14.63		.375 20.80	.375 20.80		.500 27.06		.625 32.99	.750 38.59
6	6.63	.109 7.59	.134 9.30		.250 17.04	.280 18.99	.280 18.99		.432 28.00	.432 28.00		.562 36.43		.718 45.39	.864 53.21
8	8.63	.109 9.92	.148 13.41	.250 22.38	.277 24.72	.322 28.58	.322 28.58	.406 35.67	.500 43.43	.500 43.43	.594 50.91	.719 60.77	.812 67.82	.906 74.76	.875 72.49
10	10.75	.134 15.21	.165 18.67	.250 28.06	.307 34.27	.365 40.52	.365 40.52	.500 54.79	.594 64.39	.500 54.79	.718 77.10	.844 89.28	1.000 104.23	1.125 115.75	1.000 104.23
12	12.75	.165 22.20	.180 24.19	.250 33.41	.330 43.81	.406 53.37	.375 49.61	.562 73.22	.688 88.71	.500 65.48	.844 107.42	1.000 125.61	1.125 139.81	1.312 164.42	1.000 125.61
14	14.00		.250 36.75	.312 45.65	.375 54.62	.438 63.50	.375 54.62	.593 84.99	.750 103.23	.500 72.16	.938 130.98	1.094 150.81	1.250 170.37	1.406 189.29	
16	16.00		.250 42.09	.312 52.32	.375 62.65	.500 82.85	.375 62.65	.656 107.60	.844 136.59	.500 82.85	1.031 164.98	1.219 192.47	1.438 223.71	1.594 245.34	
18	18.00		.250 47.44	.312 58.99	.437 82.23	.562 104.76	.375 70.65	.750 138.30	.938 171.08	.500 93.45	1.156 208.15	1.375 244.37	1.562 274.48	1.781 308.79	
20	20.00		.250 52.78	.375 78.67	.500 1 04.23	.594 123.02	.375 78.67	.812 166.56	1.031 209.06	.500 104.23	1.281 256.15	1.500 296.65	1.750 341.41	1.969 379.36	
22	22.00		.250 58.13	.375 86.69	.500 114.92		.375 86.69	.875 197.60	1.125 251.05	.500 114.92	1.375 303.16	1.625 353.94	1.875 403.38	2.125 451.49	
24	24.00		.250 63.47	.375 94.71	.562 140.81	.688 171.56	.375 94.71	.969 238.33	1.219 296.63	.500 125.61	1.531 367.64	1.812 429.99	2.062 483.57	2.344 542.44	
26	26.00		.312 85.68	.500 136.30			.375 102.72			.500 136.30					
28	28.00		.312 92.35	.500 146.99	.625 182.90		.375 110.74			.500 146.99					
30	30.00		.312 99.02	.500 157.68	.625 196.26		.375 118.76			.500 157.88					
32	32.00		.312 105.69	.500 168.37	.625 209.62	.688 230.29	.375 126.75			.500 168.37					
34	34.00		.344 123.77	.500 179.06	.625 22.99	.688 245.0	.375 134.79			.500 179.06					
36	36.00		.312 19.03	.500 189.75	.625 236.50	.750 282.62	.375 142.81			.500 189.75					
42	42.00						.375 166.86			.500 221.82					
48	48.00						.375 190.92			.500 253.89					

TOP NUMBER = WALL THICKNESS

BOTTOM NUMBER = WEIGHT PER FOOT

K05 Light Weight Flexible Coupling

KLAMPz®
Grooved Piping System



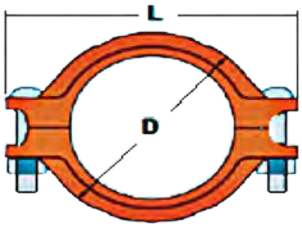

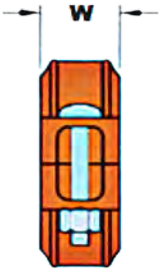

Part Number	Nominal Size	Pipe O.D.	UL/FM Working Pressure	Non-UL/FM Working Pressure	Dimensions (in)			Bolt/Nut Size
					D	L	W	
K050150PE(-ULFM)	1.5	1.900	300 psi	500 psi	2.72	4.49	1.77	0.375" x 1.5"
K050200PE(-ULFM)	2	2.375			3.29	4.88	1.81	0.375" X 2.125"
K050250PE(-ULFM)	2.5	2.875			3.74	5.51	1.81	0.375" X 2.125"
K050300PE(-ULFM)	3	3.500			4.49	6.14	1.81	0.375" X 2.125"
K050400PE(-ULFM)	4	4.500			5.59	7.44	1.97	0.5" X 2.5"
K050500PE(-ULFM)	5	5.563			6.69	8.74	1.97	0.5" X 2.5"
K050600PE(-ULFM)	6	6.625			7.72	9.61	1.97	0.5" X 2.5"
K050800PE(-ULFM)	8	8.625			9.92	12.44	2.36	0.625" X 3.125"
K051000PE(-ULFM)	10	10.750			12.56	15.47	2.52	0.75" X 3.5"
K051200PE(-ULFM)	12	12.750			14.72	17.83	2.56	0.75" X 4.25"
K051400PE(-ULFM)	14	14.000			18.09	20.08	2.95	0.875" x 4.375"
K051600PE	16	16.000			18.19	21.93	3.01	0.875" x 5.5"

AVAILABLE IN:

- UL/FM APPROVED
- NON-UL/FM VERSION

ALL DIMENSIONS ARE IN INCHES UNLESS OTHERWISE STATED.

1) Flexible Couplings in straight runs should be supported as close to the coupling as possible, or within the distance.

2) Flexible couplings provide either axial or longitudinal movement. The available movement for roll-grooved joints is 1/2 of cut-groove dimensions per ANSI/AWWA C606-06.

3) When pre-setting power nut-drivers, the following torque should not be exceeded. Excessive tightening of the nuts could result in joint failure. (Values Ft-Lbs.) 0.375"= 50-59 ; 0.5"=81-92 ; 0.625"= 147-190; 0.75"=177-179; 0.875"=202-221.

4) The standard finish is Epoxy Powder Coat, but other finishes are available upon request, including Paint, Dacromet and Hot-Dip Galvanized.

5) Compatible with KLAMPz KGE product line.

K10 90° Elbow

K11 45° Elbow

KLAMPz®
Grooved Piping System



K10 90° ELBOW



K11 45° ELBOW

Nominal Size	Pipe O.D.	UL/FM Working Pressure	Non-UL/FM Working Pressure	"C to E" Dimensions	
				K10	K11
1.5	1.900	300 psi	500 psi	2.75	1.75
2	2.375			3.25	2.00
2.5	2.875			3.75	2.25
3	3.500			4.25	2.50
4	4.500			5.00	3.00
5	5.563			5.50	3.25
6	6.625			6.50	3.50
8	8.625			7.75	4.25
10	10.750			9.00	4.75
12	12.750			10.00	5.25

AVAILABLE IN:

- UL/FM APPROVED
- NON-UL/FM VERSION

ALL DIMENSIONS ARE IN INCHES UNLESS OTHERWISE STATED.

PART NUMBER STRUCTURE

Part Number Section	Options
Model	K10, K11
Size	xxxx (4-digits) / (Example: Size=1.25 = 0125)
UL/FM Certification	-ULFM
Example	K100400-ULFM / K110125

1) Fittings are cast ductile iron conforming to ASTM A536, Gr. 65-45-12 Ductile Iron

2) Dimensions meet ANSI/AWWA C606-06.

3) Center to End Dimensions are manufacture's standard.

4) Fittings larger than 14" may be fabricated from steel pipe to ASTM A53, Gr. B or equivalent.

5) The standard finish is Epoxy Powder Coat, but other finishes are available upon request, including Paint, Dacromet and Hot-Dip Galvanized.

K20 Tee

KLAMPz®
Grooved Piping System





Part Number	Nominal Size	Pipe O.D.	UL/FM Working Pressure	Non-UL/FM Working Pressure	C to E
K200150P(-ULFM)	1.5	1.900	300 psi	500 psi	2.75
K200200P(-ULFM)	2	2.375			3.25
K200250P(-ULFM)	2.5	2.875			3.75
K200300P(-ULFM)	3	3.500			4.25
K200400P(-ULFM)	4	4.500			5.00
K200500(-ULFM)	5	5.563			5.50
K200600P(-ULFM)	6	6.625			6.50
K200800P(-ULFM)	8	8.625			7.75
K201000P(-ULFM)	10	10.750			9.00
K201200P(-ULFM)	12	12.750			10.00

AVAILABLE IN:

- UL/FM APPROVED
- NON-UL/FM VERSION

ALL DIMENSIONS ARE IN INCHES UNLESS OTHERWISE STATED.

1) Fittings are cast ductile iron conforming to ASTM A536, Gr. 65-45-12 Ductile Iron.

2) Dimensions adhere to ANSI/AWWA C606-06.

3) Center to End Dimensions are manufacture's standard.

4) Fittings larger than 14" may be fabricated from steel pipe ASTM A53, Gr. B or equivalent.

5) The standard finish is Epoxy Powder Coat, but other finishes are available upon request, including Paint, Dacromet and Hot-Dip Galvanized.

K41 Flange Adapter

KLAMPz® Grooved Piping System

UL LISTED FM APPROVED



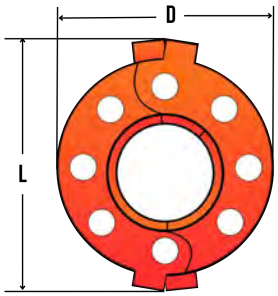

Part Number	Nominal Size	Pipe O.D.	UL/FM Working Pressure	Non-UL/FM Working Pressure	Dimensions (Inches)		# B.H.	Bolt/Nut Size
					D	L		
K410200PE(-ULFM)	2	2.375	250 psi	250 psi	6.46	8.27	4	0.375" x 2.750"
K410250PE(-ULFM)	2.5	2.875			6.93	9.45	4	0.375" x 2.750"
K410300PE(-ULFM)	3	3.500			7.56	9.84	4	0.375" x 2.750"
K410400PE(-ULFM)	4	4.500			8.82	10.94	8	0.375" x 2.750"
K410500PE(-ULFM)	5	5.563			10.00	12.20	8	0.375" x 2.750"
K410600PE(-ULFM)	6	6.625			11.10	13.23	8	0.500" x 3.125"
K410800PE(-ULFM)	8	8.625			13.50	15.55	8	0.500" x 3.125"
K411000PE(-ULFM)	10	10.750			15.91	18.50	12	0.625" x 3.875"
K411200PE(-ULFM)	12	12.750			19.20	23.00	12	0.625" x 3.875"

AVAILABLE IN:

- UL/FM APPROVED
- NON-UL/FM VERSION

ALL DIMENSIONS ARE IN INCHES UNLESS OTHERWISE STATED.

1) A hard metal washer is required between the # K41 gasket and any rubber mating surface, i.e. wafer and lug butterfly valves, flexible connectors, etc.

2) Two factory supplied closure bolts are included with the Model K41 Grooved Flange Adapter.

3) The Model K41 Grooved Flange Adapters should not be used as an anchor point for tie-rods on un-restrained joints

4) When mounting the Model K41 Grooved Flange Adapter to valves, assure that there is adequate clearance between the flange and valve handle, operator, etc.

5) The standard finish is Epoxy Powder Coat, but other finishes are available upon request, including Paint, Dacromet and Hot-Dip Galvanized.

6) Compatible with KLAMPz KGE product line.

7) Flange drilling pattern meets ANSI 125/150#

K58 Groove x Bevel Adapter Nipple

KLAMPz®
Grooved Piping System



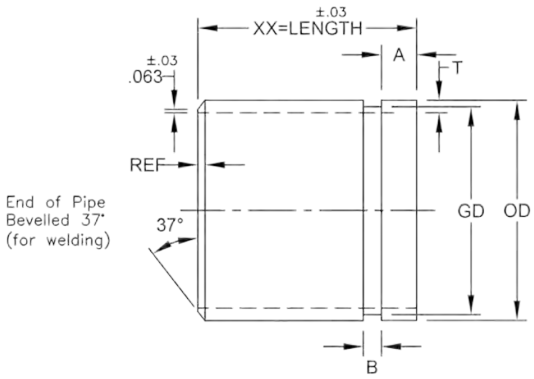

Nominal Pipe Size	O.D.	Wall Thickness	Groove Diameter	"A" (+/-0.03)	"B" (+/-0.03)	"E to E" Length
1.5	1.190	0.145	1.775 (-.015)	0.625	0.313	4
2	2.375	0.154	2.250 (-0.15)	0.625	0.313	4
2.5	2.875	0.203	2.720 (-.018)	0.625	0.313	4
3	3.500	0.216	3.344 (-.018)	0.625	0.313	4
4	4.500	0.237	4.334 (-.020)	0.625	0.375	4
5	5.563	0.258	5.395 (-.020)	0.625	0.375	4
6	6.625	0.280	6.455 (-.022)	0.625	0.375	4
8	8.625	0.322	8.441 (-.025)	0.750	0.438	4
10	10.750	0.365	10.562 (-.027)	0.750	0.500	4
12	12.750	0.375	12.531 (-.030)	0.750	0.500	4
14	14.000	0.375	13.781 (-.030)	0.938	0.500	4

ALL DIMENSIONS ARE IN INCHES UNLESS OTHERWISE STATED.

1) Pipe nipples are cut-grooved per ANSI /AWWA C606.

2) Pressure ratings are dependent upon coupling selected.

3) Different pipe schedules and materials are available upon request.

4) Nipples ≤2" are manufactured from ASTM A53 Grade B black Schedule 80 pipe.

5) Nipples ≥2.5" are manufactured from ASTM A53 Grade B black Schedule 40 pipe.

SK58 Groove x Bevel Adapter Nipple

KLAMPz®
Grooved Piping System



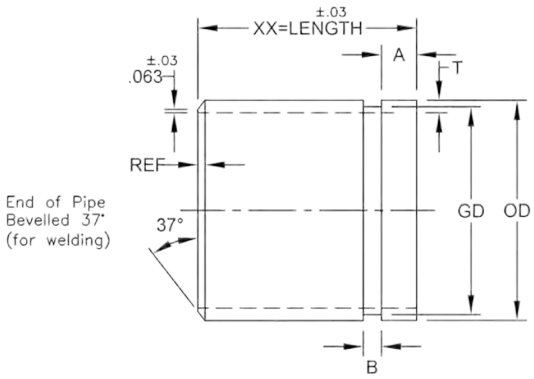

Nominal Pipe Size	O.D.	Wall Thickness	Groove Diameter	"A" (+/-0.03)	"B" (+/-0.03)	"E to E" Length
1.25	1.660	0.140	1.535 (-.015)	0.625	0.313	2, 3, or 4
1.5	1.190	0.145	1.775 (-.015)	0.625	0.313	2, 3, or 4
2	2.375	0.154	2.250 (-0.15)	0.625	0.313	2, 3, or 4
2.5	2.875	0.203	2.720 (-.018)	0.625	0.313	2, 3, or 4
3	3.500	0.216	3.344 (-.018)	0.625	0.313	2, 3, or 4
4	4.500	0.237	4.334 (-.020)	0.625	0.375	2, 3, or 4
5	5.563	0.258	5.395 (-.020)	0.625	0.375	2, 3, or 4
6	6.625	0.280	6.455 (-.022)	0.625	0.375	2, 3, or 4
8	8.625	0.322	8.441 (-.025)	0.750	0.438	2, 3, or 4
10	10.750	0.365	10.562 (-.027)	0.750	0.500	2, 3, or 4
12	12.750	0.375	12.531 (-.030)	0.750	0.500	2, 3, or 4
14	14.000	0.375	13.781 (-.030)	0.938	0.500	2, 3, or 4

ALL DIMENSIONS ARE IN INCHES UNLESS OTHERWISE STATED.

1) Pipe nipples are cut-grooved per ANSI/AWWA C606.

2) Stainless steel class follows ASME B36.19.

3) Pressure ratings are dependent upon the coupling selected.

4) Nipples ≤2" are manufactured from Sch.80 stainless steel pipe to ASTM A312 304, 304L, 316, 316L

5) Nipples ≥2.5" are manufactured from Sch.40 stainless steel pipe to ASTM A312 304, 304L, 316, 316L

6) Other sizes and lengths available upon request.

K60 Grooved Cap

KLAMPz® Grooved Piping System

UL LISTED FM APPROVED





Part Number	Nominal Size	Pipe O.D	"L"	UL/FM Working Pressure	Non-UL/FM Working Pressure
K600150P(-ULFM)	1.5	1.900	0.94	300 psi	500 psi
K600200P(-ULFM)	2	2.375	0.94		
K600250P(-ULFM)	2.5	2.875	0.94		
K600300P(-ULFM)	3	3.500	0.94		
K600400P(-ULFM)	4	4.500	1.00		
K600500P(-ULFM)	5	5.563	1.00		
K600600P(-ULFM)	6	6.625	1.00		
K600800P(-ULFM)	8	8.625	1.26		
K601000P(-ULFM)	10	10.750	1.26		
K601200P(-ULFM)	12	12.750	1.26		

AVAILABLE IN:

- UL/FM APPROVED
- NON-UL/FM VERSION

ALL DIMENSIONS ARE IN INCHES UNLESS OTHERWISE STATED.

1) Model K60 are cast ductile iron conforming to ASTM A536, Gr. 65.45.12.
2) Dimensions adhere to ANSI/AWWA C606-06.
3) The standard finish is Epoxy Powder Coat, but other finishes are available upon request, including Paint, Dacromet and Hot-Dip Galvanized.

KGE EPDM Gaskets

KLAMPz® Grooved Piping System

UL LISTED FM APPROVED



Nominal Size	Pipe O.D
1.5	1.900
2	2.375
2.5	2.875
3	3.500
4	4.500
5	5.563
6	6.625
8	8.625
10	10.750
12	12.750
14	14.000
16	16.000



PART NUMBER STRUCTURE

Part Number Section	Options
Type	KGE
Size	xxxx (4-digits) / (Example: Size=1.25 = 0125)
Model	K05 & K07 = BLANK K41 = -K41
Example	KGE0400-41 (K41) / KGE0125 (K05 & K07)

ALL DIMENSIONS ARE IN INCHES UNLESS OTHERWISE STATED.

1) EPDM: TEMPERATURE RANGE (-34°C) -30°F (+110°C) +230°F.
Suitable for water, non-oil, dilute acids, alkaline salt and many non-hydrocarbon chemicals. DO NOT USE FOR HYDROCARBON SERVICES.

2) Always lubricate gaskets with inert soap-based lube to avoid pinching during installation.

3) KGE Series Gaskets are made for KLAMPz K05, K07, and K41 product lines.

KTB Track Head Bolts

KLAMPz®
Grooved Piping System



ANSI
0.375" X 1.5"
0.375" X 2.25"
0.5" X 2.5"
0.625" X 3.125"
0.75" X 3.5"
0.75" X 4.25"
0.75" X 5"

ALL DIMENSIONS ARE IN INCHES UNLESS OTHERWISE STATED.

1) Bolts are mild steel, heat treated & Zinc electroplated conforming to ASTM A183, Gr.2.
2) Hex Nuts conform to ASTM A563 Gr. B.
3) Threads adhere to UNC (Unified National Coarse) as put forth by ASME/ANSI.
4) Tensile strength = 110,000 psi; Yield = 80,000 psi; Elongation = 12%.

Fittings & Accessories



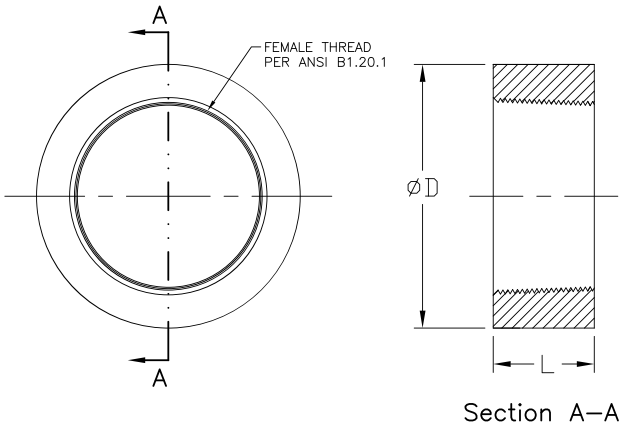



Half Couplings

O.D. TUBE SIZES

API Part Number	Nominal Pipe Size (inches)	OD	End to End Length	Threads per Inch
THC0025	0.25	0.710	0.57	18.0
THC0050	0.5	1.060	0.75	14.0
THC0075	0.75	1.310	0.81	14.0
THC0100	1	1.570	1.00	11.5
THC0125	1.25	1.900	1.00	11.5
THC0150	1.5	2.200	1.00	11.5
THC0200	2	2.750	1.06	11.5
THC0250	2.5	3.250	1.06	8.0
THC0300	3	4.000	1.63	8.0
THC0400	4	5.000	1.75	8.0
THC0500	5	6.290	1.90	8.0
THC0600	6	7.390	2.00	8.0
THC0800	8	9.610	2.63	8.0

Notes:

a. Coupling material is mild steel.

b. Threads conform to ANSI B1.20.1.

ALL DIMENSIONS ARE IN INCHES UNLESS OTHERWISE STATED.

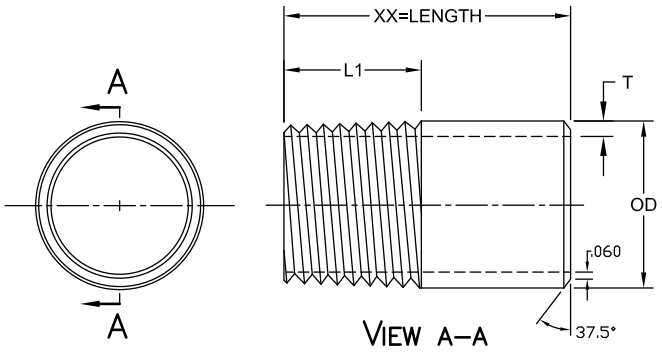



Threaded One End Nipples

O.D. TUBE SIZES

API Part Number	Nominal Pipe Size (inches)	OD	End to End Length	Threads Per Inch	Min. Thread Length	Min. Wall Thickness
TOE0075-1.0	0.75	1.050	1.00	14.0	0.65	0.113
TOE0075-3.0	0.75	1.050	3.00	14.0	0.65	0.113
TOE0100-1.0	1	1.315	1.00	11.5	0.65	0.133
TOE0100-3.0	1	1.315	3.00	11.5	0.65	0.133
TOE0125-1.5	1.25	1.660	1.50	11.5	0.93	0.140
TOE0125-3.0	1.25	1.660	3.00	11.5	0.93	0.140
TOE0200-2.0	2	2.375	2.00	11.5	1.10	0.154
TOE0200-3.0	2	2.375	3.00	11.5	1.10	0.154
TOE0250-2.0	2.5	2.875	2.00	8.0	1.30	0.203
TOE0300-3.0	3	3.500	3.00	8.0	1.65	0.216
TOE0300-4.0	3	3.500	4.00	8.0	1.65	0.216
TOE0400-4.0	4	4.500	4.00	8.0	1.75	0.237
TOE0500-4.0	5	5.563	4.00	8.0	1.85	0.258
TOE0600-4.0	6	6.625	4.00	8.0	2.00	0.280
TOE0600-4.5	6	6.625	4.50	8.0	2.00	0.280
TOE0600-6.0	6	6.625	6.00	8.0	2.00	0.280
TOE0800-4.0	8	8.625	4.00	8.0	2.15	0.322
TOE0800-6.0	8	8.625	6.00	8.0	2.15	0.322

Notes:

a. Nipple material is mild steel.

b. NPT threads in accordance with ANSI B2.1.

ALL DIMENSIONS ARE IN INCHES UNLESS OTHERWISE STATED.

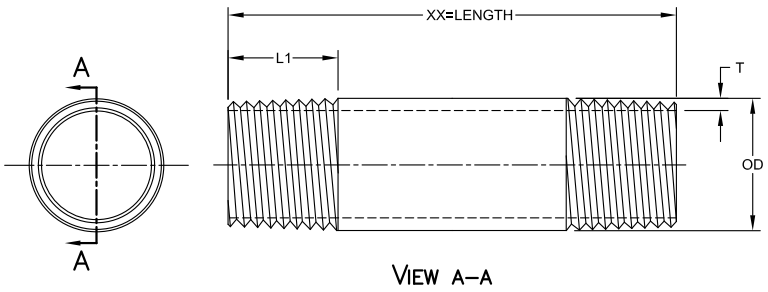



Threaded Both End Nipples

O.D. TUBE SIZES

API Part Number	Nominal Pipe Size (inches)	OD	End to End Length	Threads per Inch	Min. Thread Length	Min. Wall Thickness
TBE0075-1.38	0.75	1.050	1.38	14.0	0.75	0.113
TBE0075-2.0	0.75	1.050	2.00	14.0	0.75	0.113
TBE0075-3.0	0.75	1.050	3.00	14.0	0.75	0.113
TBE0100-4.0	1	1.315	4.00	11.5	1.00	0.133
TBE0100-12.0	1	1.315	12.00	11.5	1.00	0.133
TBE0250-6.0	2.5	2.875	6.00	8.0	1.60	0.209
TBE0400-8.0	4	4.500	8.00	8.0	1.75	0.237

Notes:

a. Nipple material is mild steel.

b. NPT threads in accordance with ANSI B2.1.

ALL DIMENSIONS ARE IN INCHES UNLESS OTHERWISE STATED.

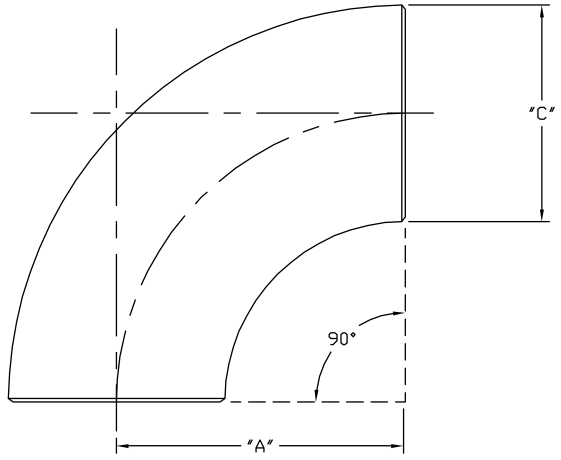

L ONG RADIUS 90°



Long Radius 304L Stainless Steel 90° Elbows (LRE Series)

DIMENSIONS

API Part Number	NOM. PIPE SIZE	OUTSIDE DIAMETER (O.D)	CENTER TO END (C to E)	INSIDE DIAMETER (I.D)	WALL THICKNESS (T)
LRE0100-90	1	1.315	1.500	1.097	0.109
LRE0125-90	1.25	1.660	1.875	1.442	0.109
LRE0150-90	1.5	1.900	2.250	1.682	0.109
LRE0200-90	2	2.375	3.000	2.157	0.109
LRE0250-90	2.5	2.875	3.750	2.635	0.120
LRE0300-90	3	3.500	4.500	3.260	0.120
LRE0400-90	4	4.500	6.000	4.260	0.120
LRE0500-90	5	5.563	7.500	5.295	0.134
LRE0600-90	6	6.625	9.000	6.357	0.134
LRE0800-90	8	8.625	12.000	8.329	0.148
LRE1000-90	10	10.750	15.000	10.420	0.165
LRE1200-90	12	12.750	18.000	12.390	0.180

- ANSI B16.9
- MSS SP-43
- Schedule 10S

ALL DIMENSIONS ARE IN INCHES UNLESS OTHERWISE STATED.

MATERIALS

- ASTM A403
- WP304
- WP304H
- WP304L
- WP316
- WP316L





Gaskets

API stocks a variety of sizes of full face and ring gaskets in green Non-Asbestos (GNA Series) and SBR (GRR Series) materials.

Nominal Pipe Size I.D. (old style)	ANSI Size I.D. (newstyle)	Full Face Gaskets (125/150#)				Full Face Gaskets (250/300#)				Ring Gaskets	
		O.D	# B.H	Ø B.H.	Ø B.H.C.	O.D	# B.H	Ø B. H.	Ø B.H. C.	125/150# (OD)	250/300# (OD)
0.50	0.878	3.50	4	0.625	2.375	3.750	4	0.625	2.625	1.875	2.125
0.75	1.062	3.88	4	0.625	2.750	4.625	4	0.750	3.250	2.250	2.625
1	1.313	4.25	4	0.625	3.125	4.875	4	0.750	3.500	2.625	2.875
1.25	1.683	4.63	4	0.625	3.500	5.250	4	0.750	3.875	3.000	3.250
1.50	1.943	5.00	4	0.625	3.875	6.125	4	0.875	4.500	3.375	3.750
2	2.375	6.00	4	0.750	4.750	6.500	8	0.875	5.000	4.125	4.375
2.5	2.875	7.00	4	0.750	5.500	7.500	8	0.875	5.875	4.875	5.125
3	3.500	7.50	4	0.750	6.000	8.250	8	0.875	6.625	5.375	5.875
3.50	4.000	8.50	8	0.750	7.000	9.000	8	0.875	7.250	6.375	6.500
4	4.500	9.00	8	0.750	7.500	10.00	8	0.875	7.875	6.875	7.125
5	5.563	10.00	8	0.875	8.500	11.00	8	0.875	9.250	7.750	8.500
6	6.625	11.00	8	0.875	9.500	12.50	12	0.875	10.63	8.750	9.875
8	8.650	13.50	8	0.875	11.75	15.00	12	1.000	13.00	11.000	12.125
10	10.750	16.00	12	1.000	14.25	17.50	16	1.125	15.25	13.380	14.250
12	12.750	19.00	12	1.000	17.00	20.50	16	1.250	17.75	16.130	16.625
14	14.000	21.00	12	1.125	18.75	23.00	20	1.250	20.25	17.750	19.125
16	16.000	23.50	16	1.125	21.25	25.50	20	1.375	22.50	20.500	21.250
18	18.000	25.00	16	1.250	22.75	28.00	24	1.375	24.75	21.630	23.500
20	20.000	27.50	20	1.250	25.00	30.50	24	1.375	27.00	23.880	25.750
22	22.000	29.50	20	1.375	27.25	33.00	24	1.625	29.25	26.000	27.625
24	24.000	32.00	20	1.375	29.50	36.00	24	1.625	32.00	28.250	30.500
26	26.000	34.75	24	1.375	31.75	38.25	28	1.750	34.50	30.500	32.875
28	28.000	36.50	28	1.375	34.00	40.75	28	1.750	37.00	32.750	35.375
30	30.000	38.75	28	1.375	36.00	43.00	28	1.875	39.50	34.750	37.500
32	32.000	41.75	28	1.625	38.50	45.25	28	2.000	41.50	38.000	39.625
34	34.000	43.75	32	1.625	40.50	47.50	28	2.000	43.50	39.000	41.625
36	36.000	46.00	32	1.625	42.75	50.00	32	2.125	46.00	41.250	44.000
38	38.000	48.75	36	1.625	45.25	52.25	32	2.250	48.00	43.630	46.125
40	40.000	50.75	36	1.625	47.25	54.25	36	2.250	50.25	45.630	48.750
42	42.000	53.00	36	1.625	49.50	57.00	36	2.250	52.75	48.000	50.750
44	44.000	55.25	40	1.625	51.75	59.25	36	2.250	55.00	50.130	53.000
46	46.000	57.25	40	1.625	53.75	61.50	40	2.250	57.75	52.130	55.250
48	48.000	59.50	44	1.625	56.00	65.00	40	2.250	60.75	54.500	58.500

Note:

a. Dimensions per ANSI B 16.5 and AWWA C110 standards for pipe flanges and gaskets.

b. Dimensional tolerances (unless otherwise stated): Up to 1" @ +/- .0325"; 1.25" thru 12" @ +/- .0625"; 14" thru 24" @ +/- .0975"; 26" and above @ +/- .25".

c. Standard gasket material is SBR (Red Rubber) or Non-Asbestos (Green), but Neoprene, EPDM, Buna N, Silicone, Viton Teflon and other= compounds are readily available.

d. Standard thicknesses are 1/16" and 1/8", but other thickness are available.

e. Sizes above 24" available upon request (minimum order quantity may apply).

ALL DIMENSIONS ARE IN INCHES UNLESS OTHERWISE STATED.

Gaskets - Basic Compounds & Properties

				General Chemical Resistance	
Common Name (s)	**Designation**	**Composition**	**General Properties**	**Resistance to**	**Attacked by:**
Neoprene	CR	Chloroprene	Good weathering resistance and flame retarding. Good resistance to petroleum based fluids.	Moderate chemicals and acids, ozone, oils, fats, greases and many solvents.	Strong oxidizing acids, esters, ketones, chlorinated, aromatic and nitro hydrocarbons.
EPDM	EPM	Ethylene-propylen-diene-monomers	Excellent ozone, chemical and aging resistance. Excellent heat resistance. Poor resistance to petroleum based fluids.	Heat, ozone, strong oxidizing chemicals and acetone.	Petroleum based fluids, animal fats, solvents and greases.
Buna-N	NBR	Nitrile-butadiene	Excellent resistance to petroleum based fluids. Good physical properties.	Many hydrocarbons, fats, oils, hydraulic fluids and chemicals.	Ozone (except PVC blends), ketones, esters, aldehydes, chlorinated and nitro hydrocarbons.
Silicones	Q, Si	Polysiloxane	Excellent high and low temperature properties. Good oil resistance. FDA compound. Good physical properties.	Moderate chemicals and acids, ozone, oils, fats, greases and concentrated sodium hydroxide.	Many solvents, high aromatic hydrocarbons, concentrated acids, dilute sodium hydroxide.
SBR (Red Rubber)	SBR	Styrene- butadiene	Good physical properties and abrasion resistance. Poor resistance to petroleum based fluids.	Most moderate chemicals wet or dry, organic acids, alcohols, ketones and aldehydes.	Ozone, strong acids, animal fats, oils, greases and most hydrocarbons.
Viton (Fluoro-elastomer)	FPM	Hexafluoropropylene-vinylidene flouride	Excellent oil and air resistance at low and high temperatures. Excellent chemical resistance.	All aliphatic, aromatic and halogenated hydrocarbons, acids, animal and vegetable oils.	Ketones, low molecular weight esters and nitro containing compounds
Teflon® (Fluorocarbon resin)	TFE	Polytetra-flouroethylene	Excellent chemical and solvent resistance. Resistant to very high temperatures.	Inert to most chemicals, smooth anti-adhesive surface. Easily cleaned.	Acetates, NA-K and some amino acids.
Non-Asbestos	NA	Aramid fiber and synthetic fibers bonded with NBR.	General service water & oil gasket. Pressures to 1595 psi, Temp to 750o F.	Mild acids, Alkalis, Oils, general chemicals & petroleum derivatives and steam.	Consult customer service for chemical compatibility.

Notes:

a. The chemical guidelines in this table are offered as a general indication of the compatibility of various materials with chemicals and fluids listed.

b. When in doubt a sample of the compound should always be tested with the particular chemical it is to handle.

c. API stocks Non-Asbestos (GNA Series) and SBR (GRR Series) gaskets, but others are available upon request (minimum order quantity may apply).

PART NUMBER STRUCTURE

Part Number Section	Options
Material	GNA = Green Non-Asbestos GRR = Red Rubber
Size	XXXX = Size in inches going out 2 decimal places
Type	FF = Full Face R = Ring
Thickness	XXX = Size in inches going out 3 decimal paces

DC# 1026

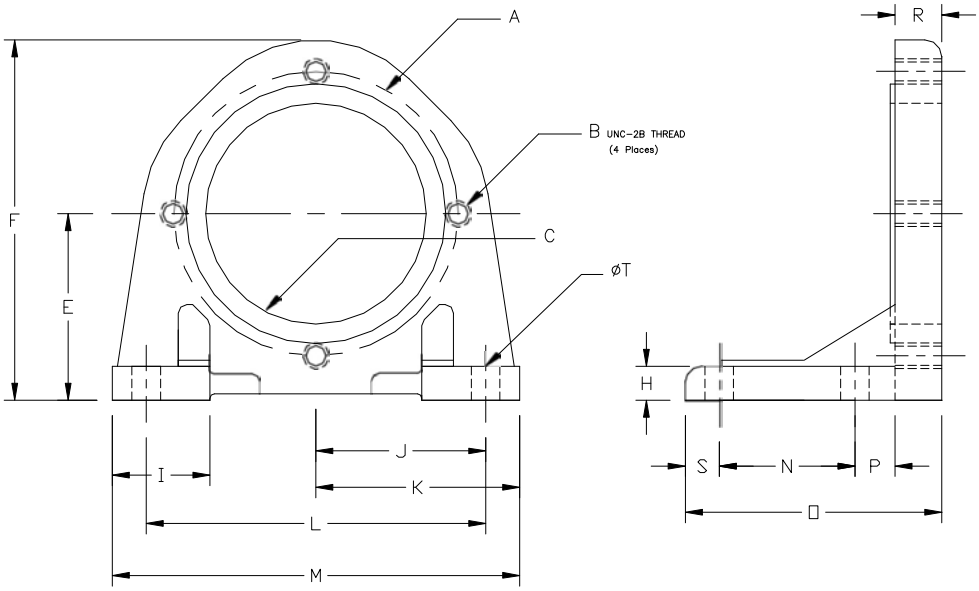

Hydraulic Motor Pump Brackets

DIMENSIONS

API Part Number	A	B	C	E	F	H	I	J	K	L	M	N	O	P	R	S	T	Weight (lbs)
HB-A	4.19	.38-16	3.25	2.75	5.31	0.50	1.44	2.50	3.00	5.00	6.00	2.00	3.78	0.59	0.69	0.50	0.43	4
HB-B	5.75	.50-13	4.00	3.63	7.12	0.50	1.44	2.88	3.38	5.75	6.75	2.00	3.77	0.59	0.69	0.50	0.43	5
HB-C	7.13	.62-11	5.00	4.31	8.50	0.62	2.00	4.63	5.22	9.25	10.44	3.00	5.18	0.75	0.75	0.68	0.69	12

ALL DIMENSIONS ARE IN INCHES UNLESS OTHERWISE STATED.

MATERIALS

Part	Material
Body	Cast Iron



Notes:
SAE-J744, 3 sizes for the same specification for Gear Pump, Vickers Piston Pump, or Vane Pump & Motors.



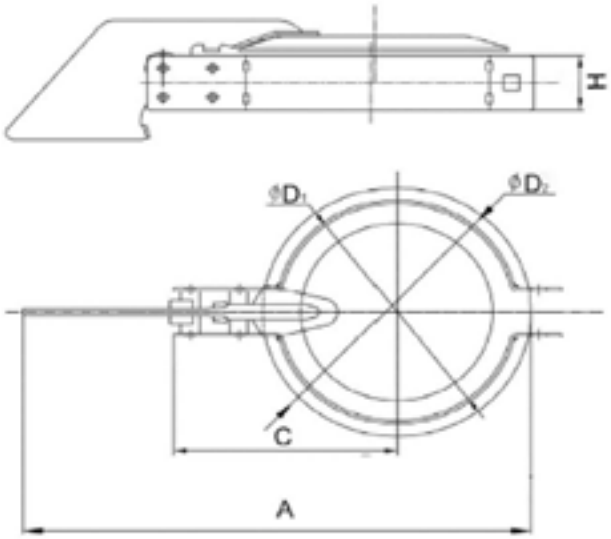

Exhaust Rain Caps

DIMENSIONS

API Part Number	Size Rain Cap ID/OD of pipe (Rounded)	"A" Overall Length/ (Required Clearance)	"C" Center of Cap to Pivot	"H" Clamp Height	"D1" Rain Cap ID/ OD of pipe	"D2" OD of Cap Cover
RC0100-x	1	5.63	2.91	1.26	1.14	1.57
RC0150-x	1.5	5.98	2.95	1.26	1.50	1.65
RC0200-x	2	6.69	3.19	1.26	2.03	2.52
RC0250-x	2.5	7.17	3.46	1.26	2.52	2.99
RC0300-x	3	7.68	3.74	1.26	3.01	3.50
RC0350-x	3.5	8.19	3.94	1.26	3.52	4.02
RC0400-x	4	9.61	4.27	1.26	4.02	4.72
RC0450-x	4.5	10.43	4.61	1.26	4.50	5.31
RC0500-x	5	10.81	4.78	1.26	5.02	5.75
RC0550-x	5.5	11.30	5.20	1.26	5.63	6.26
RC0600-x	6	11.61	5.31	1.26	5.98	6.69
RC0650-x	6.5	12.36	5.71	1.26	6.61	7.64
RC0800-x	8	13.78	6.30	1.26	7.99	8.66

"x" = **G** (Electro-Galvanized/Zinc-Plated Q235 Steel)
S (304 Stainless Steel)

TEMPERATURE RATINGS

Electro-Galvanized/ Zink-Plated Q235 Steel	750° F
304 Stainless Steel	1100° F

APPLICATIONS

- Used to prevent dirt, dust, rain and other debris from falling into exposed stack pipes

Notes:
- Rain Caps rated for 2,000,000 cycles.
- Listed "SIZE" correlates to OD of pipe, **NOT** NPS

Notes

Valve Accessories



Valve Extensions (For Butterfly Valves)

FEATURES

- Valve extensions can be used for underground service or in riser systems to enable easier access for opening and shutting butterfly valves.
- Galvanized steel for excellent corrosion resistance.

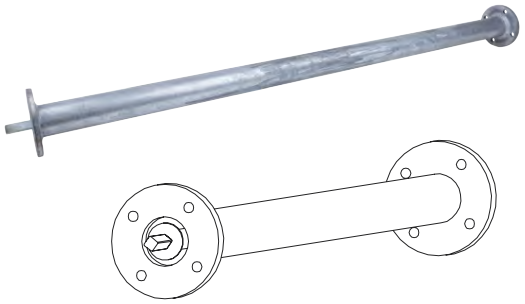

ALL DIMENSIONS ARE IN INCHES UNLESS OTHERWISE STATED.

COMPLETE SET INFORMATION (VE-D):

Complete Set Part Number	Valve/Extension Size	Extension Shaft Part Number	Extension Housing Part Number
VE0400D-XX	4	VEIS4D-XX	VEHS-XX
VE0500D-XX	5	VEIS56D-XX	VEHS-XX
VE0600D-XX	6	VEIS56D-XX	VEHS-XX
VE0800D-XX	8	VEIS8D-XX	VEHL-XX
VE1000D-XX	10	VEIS1012D-XX	VEHL-XX
VE1200D-XX	12	VEIS1012D-XX	VEHL-XX

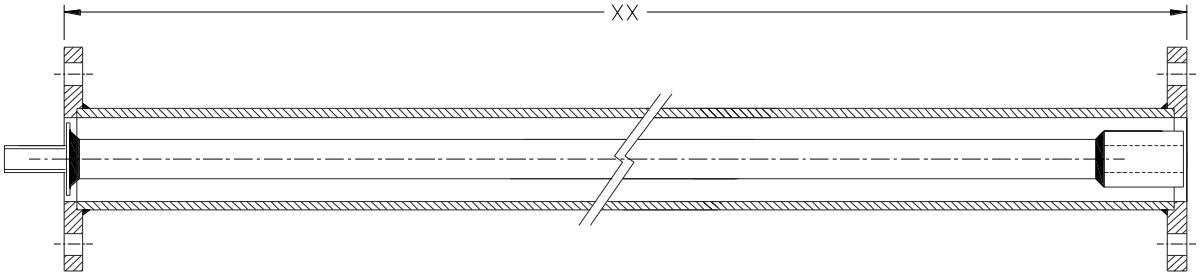

Shaft Information (VEIS-D)

Housing Part Number	Size	Diagonal Head Size (E)
VEIS4D-XX	4	0.433
VEIS56D-XX	5	0.551
VEIS56D-XX	6	0.551
VEIS8D-XX	8	0.669
VEIS1012D-XX	10	0.866
VEIS1012D-XX	12	0.866

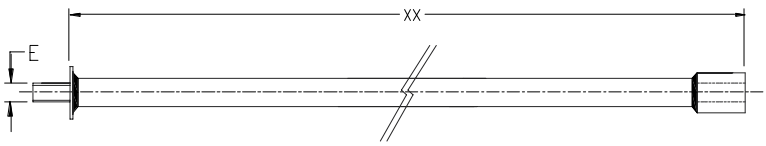

Housing Information (VEH)

Housing Part Number	Size	Bolt Circle Diameter (Øb)
VEHS-XX	4	2.76
VEHS-XX	5	2.76
VEHS-XX	6	2.76
VEHL-XX	8	4.02
VEHL-XX	10	4.02
VEHL-XX	12	4.02

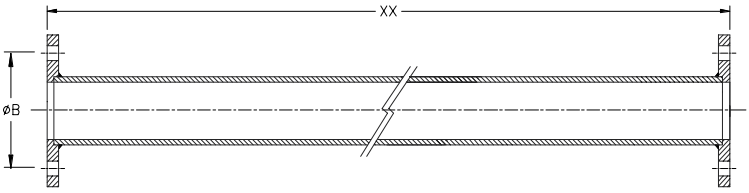

Note:
a. "XX" = Length of Valve Extension (36",48", or 72").
b. Valve extensions are for BVL and BVG product lines.

Machining Services

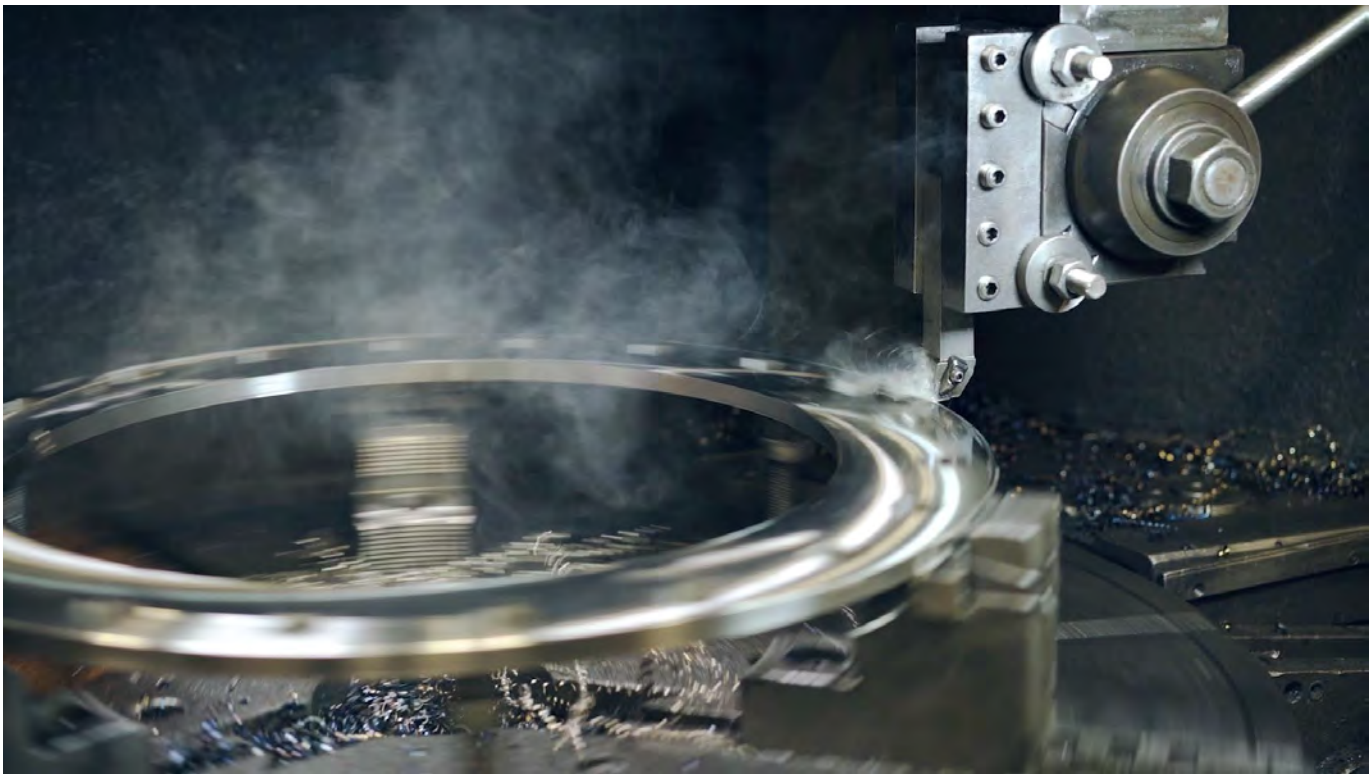

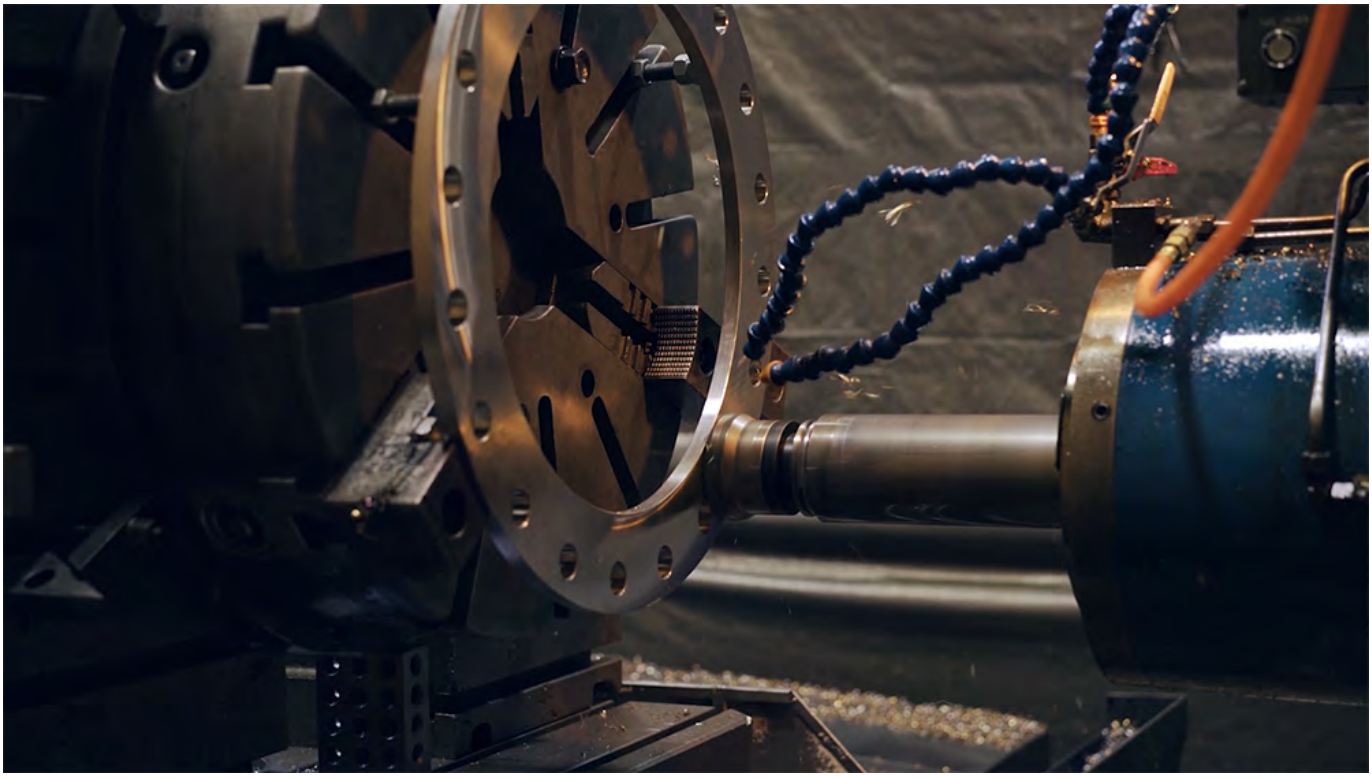

Machining Services - Features & Capabilities

Our machine shop enables API International to manufacture product that meets a wide variety of specifications utilizing Buy America, AIS or Import materials. We also support fast turn modifications to our stock items in order to meet customer needs. Whether you have a CAD drawing or sample that needs to be reverse engineered, we can work with you on prototyping, production quantity manufacturing and even warehousing product.

MILLING

- Variety of 3-axis vertical mills allows efficient machining of your part
- Open work envelope of 4-axis horizontal Boring Mill allows machining of parts up to 59”(X) x 39”(Y) x 29”(Z) in size, with the ability to work with larger parts by repositioning

TURNING

- Versatile array of lathes can handle your small to medium size parts Two
- CNC lathes with the ability to turn parts with diameters from 3” to 43” Selection of manual lathes supports
- a turning range of 3” to 108” (120” when ID >= 24“)

OUR ADVANTAGE

Range of Capabilities:
Experience with a wide variety of products, sizes, materials and specifications.

Quality Control:
Quality control technicians working with modern technology, including a Romer Arm CMM, that verifies all products meet customer requirements.

Quick Turnaround:
Short lead times that allow you to get products to customers when they need them.

Cost Reduction:
Our machine shop’s vast knowledge of tooling and fixturing can help reduce your production cost, especially on your high volume products.

MATERIAL

- Plastic:
  - Delrin, POM, Lexan, Nylon 66, Nylon 6, PEEK, PP, PE, Acetal
- Rubber:
  - EPDM, Neoprene, Buna-N, Viton
- Aluminum:
  - A2011, A2024, A2017, A5052, A5056, A6061, A6063, A6463, A6082, A7075
- Copper:
  - 3600, 3604, 3771
- Titanium:
  - 1-28
- Steel Series:
  - Ductile Iron:
    - ASTM A536
  - Carbon/Mild Steel:
    - A105, A36, A516-70, A572-50, etc.
  - Stainless Steel:
    - 300 Series- 303, 304, 304L, 316, 316L
    - 400 Series- 420J2, 430, 434, 442
- Special Metals:
  - Hastelloy, Inconel, Incoloy, Duplex 2205, Super Duplex 2507, Chrome Steel, alloys, or their equivalents

*Tooling can be added quickly in order to work with almost any material.

TOLERANCES

Part Size (max)	Tolerance
21"	±.001
42"	±.010
60"	± 1/32
120"	± 1/16

Machining Services - Machines

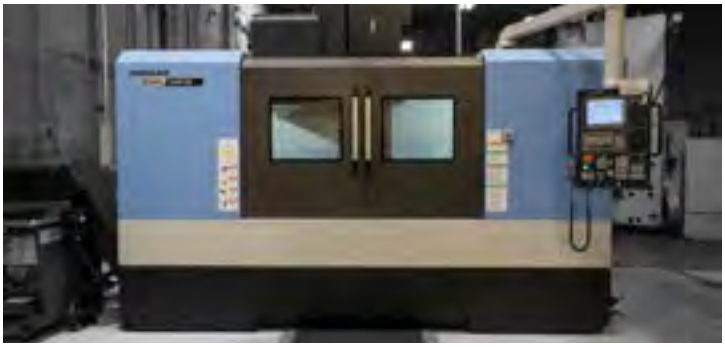

DOOSAN MYNX 7500/50
- CNC MILL
63” x 30” work envelope
Ideal for: Larger parts and exotic materials



DOOSAN DNM 5700
- CNC MILL
40” x 20” work envelope
Ideal for: High speed milling of material such as aluminum and plastic



HYUNDAI WIA LV1100R
- VERTICAL CNC LATHE (QTY. 2)
Maximum turning diameter: 39”
Ideal for: High volume turning of complex parts up to 39” diameters



DOOSAN DNM 5400/50
- CNC MILL
40” x 20” work envelope
Ideal for: Precision drilling & milling



BULLARD DYNATROL
- VERTICAL TURRET LATHE
Maximum turning diameter: 108” Ideal for: Turning rings and flanges with 42” to 108” outer diameters

Machining Services - Machines



MONARCH 96” VMC-RT
- CNC DRILLING MACHINE

Drill holes 0.25” - 3” diameter
Work piece: 20” - 108” diameter
Ideal for: Drilling bolt holes



QUICKDRILL GANTRY MACHINING CENTER - HORIZONTAL CNC MILL

120" x 120" work envelope
Ideal for: Drilling and milling large 8" thick flanges up to 18ft in diameter



DOOSAN PUMA 480/GT3100
- HORIZONTAL CNC LATHES (QTY. 2)

Maximum turning diameter: .5" x 21.5”
Maximum length of work: 39”
Ideal for: High volume turning of complex parts



SENFENG SF1500HC
- FIBER LASER

Ideal for: Rust removal, paint removal, grease removal, weld cleaning



FRYER VT-80
- VERTICAL TURRET LATHE

Max Cutting Length 32”
Cutting Diameter Range 30”- 76”
Ideal for: High volume turning of complex parts up to 80” diameter

Rubber Expansion Joints Installation Guide

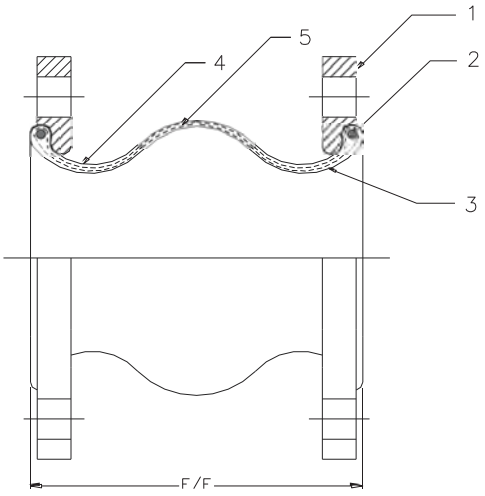



Installation Instructions
Series AMS/AMT/AJS/AJT Expansion Joints

PREPARATION

1. **Check Application Criteria.** Double-check the performance limits of the expansion joint against the anticipated operating conditions. Expansion joints should never be subjected to operating conditions beyond the temperature, pressure, and/or vacuum service recommendations of API International. If the total motions due to initial installation and the movements of pipelines during system operation exceed the published maximum allowable movement, then the pipeline should be altered to reduce the initial installation movements. Also, the line should be anchored to EJMA (Expansion Joint Manufacturers Association) specifications to limit the pipe movements that the expansion joint must absorb. For elevated temperatures (above 110° F), contact API Sales for maximum operating pressures.
2. **Check Location.** Generally, the proper location of rubber expansion joints is installed close to a main anchor point. Following the joint in the line, a pipe guide, or series of guides, should be installed to keep the pipe aligned and prevent undue displacement (of the pipe).
3. **Check Expansion Joint.** Check the interior, exterior cover, and rubber beaded faces for damage or cracks prior to placing into service. The exterior cover is designed to keep harmful material from penetrating the carcass of the joint.
4. **Check Alignment.** Expansion joints are not designed to make up for piping misalignment errors and should be no greater than 1/8" in any direction. Misalignment of an installed expansion joint reduces the rated movements and can induce severe stress of the material properties, thus causing reduced service life and premature failure.
5. **Check Support.** Piping must be supported by hangers or anchors, so that its weight is not carried by the expansion joint.
6. **Check Mating Flanges.** Be sure that companion flanges to be mated with the flanges of the expansion joint are clean. Used parts should be carefully examined for reasonable smoothness, and any adhering particles of old gasket or other foreign material should be scraped off, taking care not to gouge or mutilate the flange surface. When attaching expansion joints to raised-face flanges, the use of composite gaskets are required to prevent metal flange faces from cutting the rubber bead during installation/operation.

Note: Never install expansion joints next to wafer type check or butterfly valves. Serious damage to the rubber beaded face can result due to the lack of flange mating surface and/or bolt connection.

WARNING: Expansion joints may operate in pipelines or equipment carrying fluids and/or gases at elevated temperatures and elevated pressures and may transport hazardous materials. Precaution should be taken to periodically inspect the joints and protect personnel in the event of leakage or splash. Rubber expansion joints should not be installed in areas where inspection is not possible.

Note: Some of this information has been replicated from the "Fluid Sealing Association Handbook" on Non-Metallic Expansion Joints.

Installation Instructions
Series AMS/AMT/AJS/AJT Expansion Joints

INSTALLATION

Apply Lubricant. Expansion joints rubber beaded faces may be painted with a solution of graphite in water or glycerin to prevent adherence of joint to pipe flanges. Petroleum lubricants should not be used.

Insert Expansion Joints into Position. For flat-face mating flanges, gaskets are not required. If using raised-face mating flanges, use composite gaskets to prevent raised-face protrusion from cutting the rubber bead during installation/operation. Care must be taken when pushing the joint into the breech between the mating flanges so as not to roll the leading edge of the joint out of its flange groove. Do not bolt directly to another component with an elastomeric face or to a specialty flange without inserting a solid full-face metallic gasket.

Insert Bolts. Bolts should be inserted from the arch side (so that bolt heads are adjacent to arch) to ensure that bolts do not interfere with arch during periods of compression.

Tighten Bolts. Tighten all bolts in stages (gradually and equally) by alternating around the flange in a diagonal manner to the recommended torque values listed below. If a water-tight seal is not achieved after the final tightening (step 3), slightly tighten the nuts until leak is sealed1. Do not over-tighten to the point where there is metal to metal contact between the rotating flange and the pipe flange2. Check bolt tightness at least 24 hours after the system is started up, again after one week, and periodically every few weeks thereafter. As any rubber-like material takes a "set" after a period of compression, the bolts may loosen and result in a broken seal. In a hot and cold-water system, the bolts should be checked before changing from one medium to another.

RECOMMENDED BOLTING TORQUE* (AMS/AMT/AJS/AJT Series):

Size	Step 1 Torque FT-LBS	Step 1 Rest Period	Step 2 Torque FT-LBS	Step 2 Rest Period	Step 3 (Final) Torque FT-LBS
1"- 2"	20	30 Min	30	60 Min	30-45
2.5"	20	30 Min	35	60 Min	40-60
3"- 5"	25	30 Min	45	60 Min	45-60
6"- 8"	30	30 Min	50	60 Min	50-65
10"- 12"	30	30 Min	50	60 Min	55-80
14"- 16"	30	30 Min	55	60 Min	60-80
18"	30	30 Min	60	60 Min	70-90
20"	30	30 Min	65	60 Min	75-95
24"	30	30 Min	65	60 Min	80-100

Bolt Tightening - Add'l Notes:

1. Never attempt to tighten bolts while system is under pressure. All pressure must be relieved before attempting to tighten/re-tighten bolts.

2. Over compressing/crushing the rubber sealing bead to metal-to-metal contact between expansion joint flange & mating flange will result in premature failure.

"*" - Recommended Torque values are for reference only and may require more or less torque due to flange facing and other variables.

WARNING: Expansion joints may operate in pipelines or equipment carrying fluids and/or gases at elevated temperatures and elevated pressures and may transport hazardous materials. Precaution should be taken to periodically inspect the joints and protect personnel in the event of leakage or splash. Rubber expansion joints should not be installed in areas where inspection is not possible.

Note: Some of this information has been replicated from the "Fluid Sealing Association Handbook" on Non-Metallic Expansion Joints.

DC# 0825

Installation Instructions
Series AMS/AMT/AJS/AJT Expansion Joints

INSTALLATION - Continued

Control Rods.
For piping systems that are not anchored, control rods must be used. Control rods are always recommended as a safety precaution (even when the system is properly anchored and guided. sulation over a non-metallic rubber expansion joint is not recommended.

Additional Tips.
Insulation over a non-metallic rubber expansion joint is not recommended, however if required, it should be made removable to permit easy access for periodic inspection of body and flange area when necessary.

Do not weld in the vicinity of a non-metallic expansion joint.

If the expansion joint is to be installed outdoors, appropriate outer cover material must be used to withstand the ozone, sunlight...etc.

Correct vs Incorrect Installation Tips.

Correct Installations

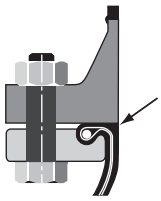

Style I - Mating Flange with correct ID (flange fully covers seat area to EJ ID) - helps prevent damage to rubber.

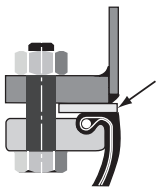

Style II - Metal Gasket can be used to improve incorrect installations shown to help prevent damage to rubber.

Incorrect Installations

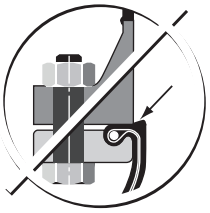

Mating Flange face has incorrect ID and is not fully covering seat area to EJ ID - will either not seal or damage sealing bead reinforcement.

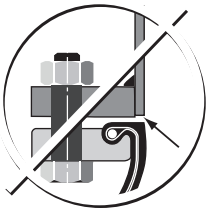

Pipe welded to mating flange is recessed from face and is not evenly covering seat area to EJ ID - will either not seal or damage sealing bead reinforcement.

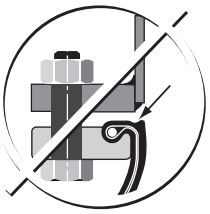

Pipe welded to mating flange is recessed from face and is not evenly covering seat area to EJ ID - will either not seal or damage sealing bead reinforcement.

WARNING: Expansion joints may operate in pipelines or equipment carrying fluids and/or gases at elevated temperatures and elevated pressures and may transport hazardous materials. Precaution should be taken to periodically inspect the joints and protect personnel in the event of leakage or splash. Rubber expansion joints should not be installed in areas where inspection is not possible.

Note: Some of this information has been replicated from the "Fluid Sealing Association Handbook" on Non-Metallic Expansion Joints.

DC# 0925

Notes



API
INTERNATIONAL